Thinking of you
Electrolux

EVYP7800

EN MICROWAVE COMBI-OVEN USER MANUAL

CONTENTS

1. SAFETY INFORMATION . . . 3
2. SAFETY INSTRUCTIONS . . . 5
3. PRODUCT DESCRIPTION . . . 7
4. BEFORE FIRST USE . . . 8
5. CONTROL PANEL . . . 8
6. DAILY USE . . . 10
7. MICROWAVE MODE . . . 13
8. CLOCK FUNCTIONS . . . 17
9. AUTOMATIC PROGRAMMES . . . 18
10. USING THE ACCESSORIES . . . 19
11. ADDITIONAL FUNCTIONS . . . 19
12. HELPFUL HINTS AND TIPS . . . 21
13. CARE AND CLEANING . . . 39
14. WHAT TO DO IF... . . . 39
15. INSTALLATION . . . 40
16. GREAT BRITAIN & IRELAND - GUARANTEE/CUSTOMER SERVICE . . . 44

WE'RE THINKING OF YOU

Thank you for purchasing an Electrolux appliance. You've chosen a product that brings with it decades of professional experience and innovation. Ingenious and stylish, it has been designed with you in mind. So whenever you use it, you can be safe in the knowledge that you'll get great results every time.

Welcome to Electrolux.

Visit our website for:

Get usage advice, brochures, trouble shooter, service information:
www.electrolux.com

Register your product for better service:
www.RegisterElectrolux.com

Buy Accessories, Consumables and Original spare parts for your appliance:
www.electrolux.com/shop

CUSTOMER CARE AND SERVICE

We recommend the use of original spare parts.
When contacting Service, ensure that you have the following data available.
The information can be found on the rating plate. Model, PNC, Serial Number.

Warning / Caution-Safety information

General information and tips

Environmental information

Subject to change without notice.

1. SAFETY INFORMATION

Before the installation and use of the appliance, carefully read the supplied instructions. The manufacturer is not responsible if an incorrect installation and use causes injuries and damages. Always keep the instructions with the appliance for future reference.

1.1 Children and vulnerable people safety

⚠ **WARNING!**
Risk of suffocation, injury or permanent disability.

- This appliance can be used by children aged from 8 years and above and persons with reduced physical, sensory or mental capabilities or lack of experience and knowledge if they are supervised by an adult or a person who is responsible for their safety.
- Do not let children play with the appliance. Children under 3 years must not be left unsupervised in the vicinity of the appliance.
- Keep all packaging away from children.
- Keep children and pets away from the appliance when it operates or when it cools down. Accessible parts are hot.
- If the appliance has a child safety device, we recommend that you activate it.
- Cleaning and user maintenance shall not be made by children without supervision.
- Keep the appliance and its cord out of reach of children less than 8 years.

1.2 General Safety

- Only a qualified person must install this appliance and replace the cable.
- Internally the appliance becomes hot when in operation. Do not touch the heating elements that are in the

appliance. Always use oven gloves to remove or put in accessories or ovenware.

- Do not use a steam cleaner to clean the appliance.
- Before maintenance cut the power supply.
- If the door or door seals are damaged, the appliance must not be operated until it has been repaired by a competent person.
- Only a competent person can carry out any service or repair operation that involves the removal of a cover which gives protection against exposure to microwave energy.
- Do not heat liquids and other foods in sealed containers. They are liable to explode.
- Only use utensils that are suitable for use in microwave ovens.
- When heating food in plastic or paper containers, keep an eye on the appliance due to the possibility of ignition.
- The appliance is intended for heating food and beverages. Drying of food or clothing and heating of warming pads, slippers, sponges, damp cloth and similar may lead to risk of injury, ignition or fire.
- If smoke is emitted, switch off or unplug the appliance and keep the door closed in order to stifle any flames.
- Microwave heating of beverages can result in delayed eruptive boiling. Care must be taken when handling the container.
- The contents of feeding bottles and baby food jars shall be stirred or shaken and the temperature checked before consumption, in order to avoid burns.
- Eggs in their shell and whole hard-boiled eggs should not be heated in the appliance since they may explode, even after microwave heating has ended.
- The appliance should be cleaned regularly and any food deposits removed.

- Failure to maintain the appliance in a clean condition could lead to deterioration of the surface that could adversely affect the life of the appliance and possibly result in a hazardous situation.
- Do not use harsh abrasive cleaners or sharp metal scrapers to clean the glass door since they can scratch the surface, which may result in shattering of the glass.
- To remove the shelf supports first pull the front of the shelf support and then the rear end away from the side walls. Install the shelf supports in the opposite sequence.
- If the supply cord is damaged, it must be replaced by the manufacturer, an authorized Service or similarly qualified persons in order to avoid a hazard.
- Ensure that the appliance is switched off before replacing the lamp to avoid the possibility of electric shock.

2. ⚠ SAFETY INSTRUCTIONS

2.1 Installation

⚠ **WARNING!**
Only a qualified person must install this appliance.

- Remove all the packaging.
- Do not install or use a damaged appliance.
- Obey the installation instruction supplied with the appliance.
- Always be careful when you move the appliance because it is heavy. Always wear safety gloves.
- Do not pull the appliance by the handle.
- Keep the minimum distance from the other appliances and units.
- Make sure that the appliance is installed below and adjacent safe structures.
- The sides of the appliance must stay adjacent to appliances or to units with the same height.

Electrical connection

⚠ **WARNING!**
Risk of fire and electrical shock.

- All electrical connections should be made by a qualified electrician.
- The appliance must be earthed.
- Make sure that the electrical information on the rating plate agrees with the power supply. If not, contact an electrician.
- Always use a correctly installed shockproof socket.
- Do not use multi-plug adapters and extension cables.
- Make sure not to cause damage to the mains plug and to the mains cable. Contact the Service or an electrician to change a damaged mains cable.
- Do not let mains cables to come in touch with the appliance door, specially when the door is hot.
- The shock protection of live and insulated parts must be fastened in such a

way that it cannot be removed without tools.

- Connect the mains plug to the mains socket only at the end of the installation. Make sure that there is access to the mains plug after the installation.
- If the mains socket is loose, do not connect the mains plug.
- Do not pull the mains cable to disconnect the appliance. Always pull the mains plug.
- Use only correct isolation devices: line protecting cut-outs, fuses (screw type fuses removed from the holder), earth leakage trips and contactors.
- The electrical installation must have an isolation device which lets you disconnect the appliance from the mains at all poles. The isolation device must have a contact opening width of minimum 3 mm.

2.2 Use

WARNING!
Risk of injury, burns or electric shock or explosion.

- Use this appliance in a household environment.
- Do not change the specification of this appliance.
- Make sure that the ventilation openings are not blocked.
- Do not let the appliance stay unattended during operation.
- Deactivate the appliance after each use.
- Be careful when you open the appliance door while the appliance is in operation. Hot air can release.
- Do not operate the appliance with wet hands or when it has contact with water.
- Do not apply pressure on the open door.
- Do not use the appliance as a work surface or as a storage surface.
- Always keep the appliance door closed when the appliance is in operation.
- Open the appliance door carefully. The use of ingredients with alcohol can cause a mixture of alcohol and air.
- Do not let sparks or open flames to come in contact with the appliance when you open the door.
- Do not put flammable products or items that are wet with flammable products in, near or on the appliance.

WARNING!
Risk of damage to the appliance.

- To prevent damage or discoloration to the enamel:

  – do not put ovenware or other objects in the appliance directly on the bottom.

  – do not put aluminium foil directly on the bottom of the appliance.

  – do not put water directly into the hot appliance.

  – do not keep moist dishes and food in the appliance after you finish the cooking.

  – be careful when you remove or install the accessories.
- Discoloration of the enamel has no effect on the performance of the appliance. It is not a defect in the sense of the warranty law.
- Use a deep pan for moist cakes. Fruit juices cause stains that can be permanent.

2.3 Care and Cleaning

WARNING!
Risk of injury, fire or damage to the appliance.

- Before maintenance, deactivate the appliance and disconnect the mains plug from the mains socket.
- Make sure the appliance is cold. There is the risk that the glass panels can break.
- Replace immediately the door glass panels when they are damaged. Contact the Service.
- Clean regularly the appliance to prevent the deterioration of the surface material.
- Remaining fat or food in the appliance can cause fire.
- Clean the appliance with a moist soft cloth. Only use neutral detergents.
- If you use an oven spray, obey the safety instructions on the packaging.

- Do not clean the catalytic enamel (if applicable) with any kind of detergent.

2.4 Internal light

- The type of light bulb or halogen lamp used for this appliance, is only for household appliances. Do not use it for house lighting.

WARNING!
Risk of electrical shock.

- Before replacing the lamp, disconnect the appliance from the power supply.
- Only use lamps with the same specifications.

2.5 Disposal

WARNING!
Risk of injury or suffocation.

- Disconnect the appliance from the mains supply.
- Cut off the mains cable and discard it.
- Remove the door catch to prevent children and pets to get closed in the appliance.

3. PRODUCT DESCRIPTION

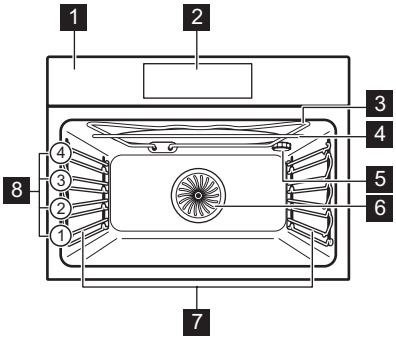

1 Control panel
2 Electronic programmer
3 Grill and heating element
4 Microwave generator
5 Lamp
6 Fan and heating element
7 Shelf support, removable
8 Shelf positions

3.1 Accessories

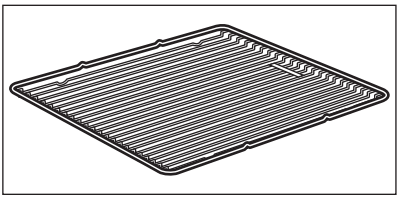

Wire shelf
For cookware, cake tins, roasts.

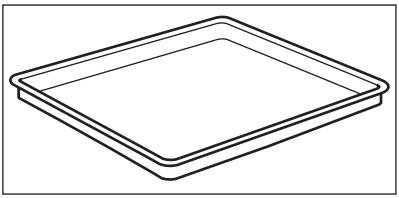

Glass baking tray

4. BEFORE FIRST USE

WARNING!
Refer to the Safety chapters.

4.1 Initial Cleaning

- Remove all parts from the appliance.
- Clean the appliance before first use.

Refer to chapter "Care and Cleaning".

4.2 First Connection

When you connect the appliance to the mains or after the power cut, you have to set the language, the display contrast, the display brightness and the time of the day. Press ∧ or ∨ to set the value. Press **OK** to confirm.

5. CONTROL PANEL

5.1 Electronic programmer

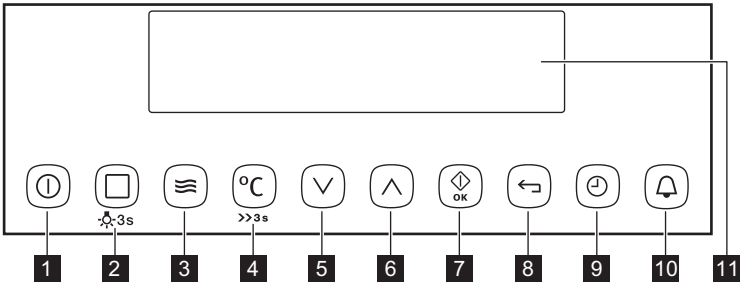

Use the sensor fields to operate the appliance

Number	Sensor field	Function	Comment
1		ON / OFF	To activate and deactivate the appliance.
2	3s	Heating Functions or Assisted Cooking	To set a heating function or an Assisted Cooking function. To set the necessary function, touch the sensor field one or two times after you activate the appliance. To activate or deactivate the lamp, touch and hold the sensor field for 3 seconds (you can also activate the lamp after you deactivate the appliance).

Number	Sensor field	Function	Comment
3	≋	Microwave function	To activate the microwave function (you can also use it after you deactivate the appliance). When you use the Microwave function with the Duration function for more than 7 minutes and in Combi mode, the Microwave power cannot be more than 600 W.
4	°C 3sec	Temperature selection	To set the temperature or show the temperature in the appliance. To activate or deactivate the Fast Heat Up function, touch and hold the sensor field for 3 seconds.
5	∨	Down key	To move down in the menu.
6	∧	Up key	To move up in the menu.
7	OK	OK / Microwave Quick Start	To confirm the selection or settings. To activate the microwave function (you can also use it after you deactivate the appliance).
8	↩	Home key	To go back one level in the menu. To show the main menu, touch the field for 3 seconds.
9	◷	Time and additional functions	To set different functions. When a heating function operates, touch the sensor field to set the timer, Function Lock , Set + Go , Heat + Hold or Favourite Programme memory.
10	🔔	Minute Minder	To set the Minute Minder .
11	-	Display	It shows the settings of the appliance.

Display

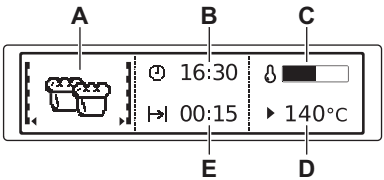

A) Heating function
B) Time of day
C) Heat up indicator
D) Temperature
E) Duration and End Time functions

Other indicators in the display

Symbol		Function
	Minute Minder	The function operates.
	Time of day	The display shows the time of day.
	Duration	The display shows the necessary time for cooking.
	End Time	The display shows when the cooking time is completed.
	Time indication	The display shows how long a heating function operates. Press ∨ and ∧ at the same time to have the time go back to zero.
	Heat up indicator	The display shows the temperature in the appliance.
	Fast Heat Up Indicator	The function operates. This function decreases the heat up time.
	Weight Automatic	The display shows that the automatic weight system operates or that you can change the weight.
	Heat + Hold	The function operates.

6. DAILY USE

WARNING!
Refer to the Safety chapters.

6.1 Navigating the menus

1. Activate the appliance.
2. Press ∨ or ∧ to select the menu option.
3. Press **OK** to move to the submenu or accept the setting.

At each point you can go back to the main menu with ↩.

6.2 The menus in overview

Main menu

Symbol	Menu item	Description
	Heating Functions	Contains a list of heating functions.
	Assisted Cooking	Contains a list of automatic cooking programmes.
	Favourite Programme	Contains a list of favourite cooking programmes made by the user.
	Basic Settings	Contains a list of other settings.

Symbol	Menu item	Description
☆	Specials	Contains a list of additional heating functions.

Submenu for: Basic Settings

Symbol	Submenu	Application
	Set Time of Day	Sets the current time on the clock.
	Time Indication	When ON, the display shows the current time when you deactivate the appliance.
	SET + GO	When ON, you can activate the function when you activate a heating function.
	Heat + Hold	When ON, you can activate the function when you activate a heating function.
	Extra time	Activates and deactivates the function.
	Display Contrast	Adjusts the display contrast by degrees.
	Display Brightness	Adjusts the display brightness by degrees.
	Set Language	Sets the language for the display.
	Buzzer Volume	Adjusts the volume of press-tones and signals by degrees.
	Key Tones	Activates and deactivates the tone of the touch fields. It is not possible to deactivate the tone of the ON / OFF touch field
	Alarm/Error Tones	Activates and deactivates the alarm tones.
i	Service	Shows the software version and configuration.
	Factory Settings	Resets all settings to factory settings.

6.3 Heating functions

Submenu for: Heating Functions

Heating function		Application
	True Fan Cooking	To bake maximum on 2 shelf positions at the same time and to dry food. Set the temperature 20 - 40 °C lower than for Conventional Cooking .
	Pizza Setting	To bake food on 1 shelf position for a more intensive browning and a crispy bottom. Set the temperature 20 - 40 °C lower than for Conventional Cooking .

Heating function		Application
	Conventional Cooking	To bake and roast on 1 shelf position.
	Slow Cook	To prepare very lean and tender roasted food.
	Bottom Heat	To bake cakes with crispy bottoms.
	Grilling	To grill flat food and to toast.
	Fast Grilling	To grill flat food items in large quantities. To toast bread.
	Turbo Grilling	To roast larger meat joints or poultry with bones on 1 shelf position. Also to gratinate and to brown.

Submenu for: Specials

Heating function		Application
	Bread Baking	To bake bread.
	Au gratin	To prepare dishes like lasagna or potato gratin. Also to brown.
	Dough Proving	To raise the yeast dough before baking.
	Plate Warming	To preheat the plate for serving.
	Preserving	To make vegetable preserves, e.g. pickles.
	Drying	To dry sliced fruit (e.g. apples, plums, peaches) and vegetables (e.g. tomatoes, zucchini, mushrooms).
	Keep Warm	To keep cooked food warm.
	Defrost	To defrost frozen food.
	Frozen Foods	To make your convenience food like e.g. French Fries, Wedges, spring rolls crispy.

6.4 Activating a heating function

1. Activate the appliance.
2. Select the Heating Functions menu. Press **OK** to confirm.
3. Set a heating function. Press **OK** to confirm.
4. Set the temperature. Press **OK** to confirm.

Press ☐ 3s to go directly to the Heating Functions menu. You can use it when the appliance is activated.

6.5 Heat-up indicator

When you activate a heating function, the bar on the display comes on. The bar shows that the temperature increases.

Fast Heat Up Indicator

This function decreases the heat-up time. To activate the function, hold °C >>3s for 3 seconds. The heat-up indicator alternates.

Residual heat

When you deactivate the appliance, the display shows the residual heat. You can use the heat to keep the food warm.

6.6 Energy saving

The appliance contains features which help you save energy during everyday cooking:

- **Residual heat:**
  - When the heating function or programme operates, the heating elements are deactivated 10% earlier (the lamp and fan continue to operate). For this feature to operate, the cooking time must be longer than 30 minutes or you must use the clock functions (Duration , End Time).
  - When the appliance is off, you can use the heat to keep food warm. The display shows the remaining temperature.
- **Cooking with the lamp off** - Touch and hold ☐ 3s for 3 seconds to deactivate the lamp during cooking.

7. MICROWAVE MODE

7.1 Microwave

Information about operation

General:

- After you deactivate the appliance, let the food stand for some minutes (refer to “Microwave Tables: standing time”).
- Remove the aluminium foil packaging, metal containers, etc. before you prepare the food.

Cooking:

- If possible, cook food covered with material suitable for use in the microwave. Only cook food without a cover if you want to keep a crust.
- Do not overcook the dishes by setting the power and time too high. The food can dry out, burn or catch fire in some places.
- Do not use the appliance to cook eggs in their shells and snails, because they can burst. With fried eggs, pierce the yolks first.
- Prick food with "skin" or "peel", such as potatoes, tomatoes, sausages, with a fork several times before cooking so that the food does not burst.
- For chilled or frozen food, set a longer cooking time.
- Dishes which contain sauce must be stirred from time to time.
- Vegetables that have a firm structure, such as carrots, peas or cauliflower, must be cooked in water.
- Turn larger pieces after half the cooking time.
- If possible, cut vegetables into similar-sized pieces.
- Use flat, wide dishes.
- Do not use cookware made of porcelain, ceramic or earthenware with small holes, e. g. on handles or unglazed bottoms. Moisture going into the holes can

cause the cookware to crack when it is heated.

Defrosting meat, poultry, fish:

- Put the frozen, unwrapped food on a small upturned plate with a container below it, or on a defrosting rack or plastic sieve so that the defrosting liquid can run off.
- Turn the food after half the defrosting time. If possible, divide and then remove the pieces that have started to defrost.

Defrosting butter, portions of gateau, quark:

- Do not fully defrost in the appliance, but let them defrost at room temperature. This gives a more even result. Fully remove all metal or aluminium packaging or parts before defrosting.

Defrosting fruit, vegetables:

- Do not fully defrost fruit and vegetables, which are to be further prepared while raw, in the appliance. Let them defrost at room temperature.
- You can use a higher microwave power to cook fruit and vegetables without defrosting them first.

Ready meals:

- Ready meals in metal packaging or plastic trays with metal covers can only be defrosted or heated in the microwave if they are expressively designated as suitable for use in the microwave.
- You must follow the manufacturer's instructions printed on the packaging (e. g. remove the metal cover and pierce the plastic film).

Suitable cookware and materials

Cookware / Material	Microwave			Grilling
	Defrosting	Heating	Cooking	♥♥♥♥
Ovenproof glass and porcelain (with no metal components, e. g. Pyrex, heat-proof glass)	X	X	X	X
Non-ovenproof glass and porcelain 1)	X	--	--	--
Glass and glass ceramic made of ovenproof/frost-proof material (e. g. Arcoflam), grill shelf	X	X	X	X
Ceramic 2), earthenware 2)	X	X	X	--
Heat-resistant plastic up to 200 °C 3)	X	X	X	--
Cardboard, paper	X	--	--	--
Clingfilm	X	--	--	--
Roasting film with microwave safe closure 3)	X	X	X	--
Roasting dishes made of metal, e. g. enamel, cast iron	--	--	--	X
Baking tins, black lacquer or silicon-coated 3)	--	--	--	X

Cookware / Material	Microwave			Grilling
	Defrosting	Heating	Cooking	♥♥♥♥
Baking tray	X	X	X	X
Browning cookware, e. g. Crisp pan or Crunch plate	--	X	X	--
Ready meals in packaging [3]	X	X	X	X

[1] With no silver, gold, platinum or metal plating/decorations

[2] Without quartz or metal components, or glazes which contain metals

[3] You must follow the manufacturer's instructions about the maximum temperatures.

X suitable
-- not suitable

Other things to think about...

- Food items have different shapes and qualities. They are prepared in different quantities. Because of this, the necessary time and power for defrosting, heating or cooking can vary. As a rough guide: **double the quantity = almost double the time.**
- The microwave creates the heat directly in the food. Because of this, all places cannot be heated at the same time. You must stir or turn the heated dishes, especially with larger quantities of food.
- The **standing time** is given in the tables. Let the food stand, in the appliance or outside it, so that the heat is distributed more equally.
- You get better results for rice if you use flat, wide dishes.

7.2 Microwave functions

Functions	Description
Microwave	Creates the heat directly in the food. Use it to heat pre-prepared meals and drinks, to defrost meat or fruit, and to cook vegetables and fish.
Combi	Use it to operate the oven function and the microwave mode together (selected models only). Use it to cook food in a shorter time and brown it at the same time.

7.3 Setting the Microwave function

1. If it is necessary, touch ⏻ to deactivate the appliance.
2. Touch ≋ to activate the Microwave function.
3. Touch OK . The Duration function is set to 30 seconds and the microwaves starts to operate.

ℹ Each touch of OK adds 30 seconds to the Duration time.

ℹ If you do not touch OK , the appliance deactivates after 20 seconds.

4. Touch ◷ to set the Duration function (refer to "Setting the clock functions").

ℹ When the Duration time is longer than 7 minutes the Microwave power is decreased to 600 W.

ℹ The maximum setting of the Duration time is 90 minutes.

ℹ You can change the microwave power (touch ≋ and then ∨ or ∧) and the Duration (◷) any time when the Microwave function operates.

5. When the set time ends, an acoustic signal sounds for 2 minutes. The Microwave function deactivates auto-

matically. Touch a sensor field to stop the acoustic signal.

To deactivate the Microwave function, touch ⏻

If you touch ≡ or open the door, the function stops. To start it again, touch OK .

7.4 Setting the Combi function

1. If necessary, touch ⏻ to deactivate the appliance.
2. Activate a heating function. Refer to “Activating a heating function”.
3. Touch ≡ and do the same steps as when you set the Microwave function.

The functions End Time , Set + Go and Heat + Hold are not available for the Combi function.

7.5 Setting the Quick Start function

1. If necessary, touch ⏻ to deactivate the appliance.
2. Touch OK to activate the Quick Start function.

   Each touch of OK adds 30 seconds to the Duration time.

You can change the microwave power (refer to “Setting the Microwave function”).

3. Touch ◷ to set the Duration time (refer to "Setting the clock functions").

7.6 Examples of cooking applications for power settings

The data in the table is for guidance only.

Power setting	Use
• 1000 Watt • 900 Watt • 800 Watt • 700 Watt	• Heating liquids • Searing at the start of the cooking process • Cooking vegetables • Melting gelatine and butter
• 600 Watt • 500 Watt	• Defrosting and heating frozen meals • Heating one-plate meals • Simmering stews • Cooking egg dishes
• 400 Watt • 300 Watt • 200 Watt	• Continuing to cook meals • Cooking delicate food • Heating baby food • Simmering rice • Heating delicate food • Melting cheese

Power setting	Use
• 100 Watt	• Defrosting meat, fish, bread • Defrosting cheese, cream, butter • Defrosting fruit and cakes (gateaux) • Raising yeast dough • Heating up cold dishes and drinks

8. CLOCK FUNCTIONS

8.1 Clock functions

Symbol	Function	Description
🔔	Minute Minder	To set a countdown (maximum: 2 hours, 30 minutes). This function has no effect on the operation of the appliance. Touch 🔔 to activate the function. Touch ∧ or ∨ to set the minutes and **OK** to start.
|→|	Duration	To set the length of an operation (maximum: 23 hours, 59 minutes).
→|	End Time	To set the switch-off time for a heating function (maximum: 23 hours, 59 minutes).

If you set the time for a clock function, the time starts to count down after 5 seconds.

If you use the clock functions Duration and End Time , the appliance deactivates the heating elements after 90% of the set time. The appliance uses the residual heat to continue the cooking procedure until the time ends. The residual heat can last from 3 to 20 minutes.

Setting the clock functions:

1. Set a heating function.
2. Touch ◷ again and again until the display shows the necessary clock function and the related symbol.
3. Touch ∧ or ∨ to set the necessary time. Touch **OK** to confirm.

   When the time ends, an acoustic signal sounds. The appliance deactivates. The display shows a message.
4. Touch a sensor field to stop the signal.

Useful information:

- With Duration and End Time , the appliance deactivates automatically.
- With Duration and End Time , you must set the heating function and the temperature first. Then you can set the clock function.
- You can use Duration and End Time at the same time if you want to automatically activate and deactivate the appliance at a given time later.

8.2 Heat + Hold

The Heat + Hold function keeps prepared food warm at 80 °C for 30 minutes. It activates after the baking or roasting procedure ends.

- You can activate or deactivate the function in the Basic Settings menu.
- Conditions for the function:
  - The set temperature is more than 80 °C.
  - The function Duration is set.

Activating the function

1. Activate the appliance.
2. Select the heating function.
3. Set the temperature above 80 °C.
4. Press ◷ again and again until the display shows Heat + Hold . Press **OK** to confirm.

When the function ends, an acoustic signal sounds.
The Heat + Hold function stays on if you change the heating functions.

8.3 Extra Time

The Extra Time makes the heating function continue after the Duration ends.

- It is applicable for all heating functions with Duration or Weight Automatic.

Activating the function:

1. When the cooking time ends, an acoustic signal sounds. Press a sensor field.
2. The display shows the message for Extra Time for one minute.
3. Press ◷ to activate (or ⮌ to cancel).
4. Set the Extra Time period. Press **OK** to confirm.

9. AUTOMATIC PROGRAMMES

WARNING!
Refer to the Safety chapters.

9.1 Automatic programmes

These automatic programmes give the optimum settings for each type of meat or other recipes:

- Meat programmes with Weight Automatic function (Assisted Cooking menu) — This function automatically calculates the roasting time. To use it you need to input the food weight.
- Recipe Automatic function (Assisted Cooking menu) — This function uses predefined values for a dish. Prepare the dish according to a recipe from this book.

Weight Automatic dishes
Chicken, whole
Braised Meat
Roast Game
Roast Lamb
Roast Pork
Roast Veal
Duck, whole
Goose, whole
Turkey, whole

9.2 Assisted Cooking with Recipe Automatic

This appliance has a set of recipes you can use. The recipes are fixed and you cannot change them.

Activating the function:

1. Activate the appliance.
2. Select the Assisted Cooking menu. Press **OK** to confirm.
3. Select the category and dish. Press **OK** to confirm.
4. Select Recipe Automatic . Press **OK** to confirm.

When you use the Manual function, the appliance uses the automatic settings. You can change them as with other functions.

9.3 Assisted Cooking with Weight Automatic

This function automatically calculates the roasting time. To use it, it is necessary to input the food weight.

Activating the function:

1. Activate the appliance.
2. Select Assisted Cooking . Press **OK** to confirm.
3. Select the category and dish. Press **OK** to confirm.

4. Select the Weight Automatic . Press **OK** to confirm.
5. Touch ∧ or ∨ to set the food weight. Press **OK** to confirm.

The automatic programme starts. You can change the weight at any time. Press ∧ or ∨ to change the weight. When the time ends, an acoustic signal sounds. Press a sensor field to deactivate the signal.

With some programmes turn over the food after 30 minutes. The display shows a reminder.

10. USING THE ACCESSORIES

WARNING!
Refer to the Safety chapters.

10.1 Inserting the accessories

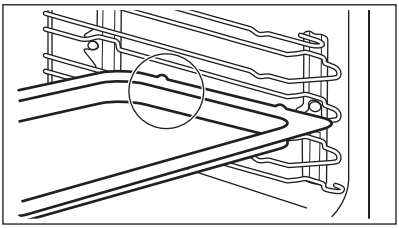

Baking tray (if applicable):
Push the baking tray between the guide bars of the shelf support.

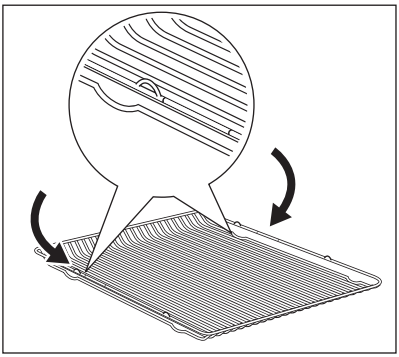

Wire shelf:
Push the shelf between the guide bars of the shelf support and make sure that the feet point down.

- All accessories have small indentations at the top of the right and left side to increase safety. The indentations are also anti-tip devices.
- The high rim around the shelf is a device which prevents cookware from slipping.

11. ADDITIONAL FUNCTIONS

11.1 Favourite Programme menu

You can save your favourite settings, like duration, temperature or heating function. They are available in the Favourite Programme menu. You can save 20 programmes.

Saving a programme

1. Activate the appliance.
2. Set a heating function or an Assisted Cooking function.
3. Touch ◷ again and again until the display shows " SAVE ". Press **OK** to confirm.
4. The display shows the first free memory position. Press **OK** to confirm.
5. Enter the name of the programme. The first letter flashes. Touch ∨ or ∧ to change the letter. Press **OK**.
6. Touch ∨ or ∧ to move the cursor to the right or to the left. Press **OK**. The next letter flashes. Do steps 5 and 6 again as necessary.
7. Press and hold **OK** to save.

Useful information:

- You can overwrite a memory position. When the display shows the first free memory position, touch ∨ or ∧ and press **OK** to overwrite an existing programme.
- You can change the name of a programme in the menu Edit Programme Name .

Activating the programme

1. Activate the appliance.
2. Select the Favourite Programme menu. Press **OK** to confirm.
3. Select your favourite programme name. Press **OK** to confirm.

11.2 Child Lock

The Child Lock prevents an accidental operation of the appliance.

Activating and deactivating the Child Lock function:

1. Activate the appliance.
2. Touch ◷ and ≡ at the same time until the display shows a message.

11.3 Function Lock

The Function Lock prevents an accidental change of the heating function. You can activate the Function Lock only when the appliance operates.

Activating the Function Lock :

1. Activate the appliance.
2. Set a heating function or setting.
3. Press ◷ again and again until the display shows Function Lock .
4. Press **OK** to confirm.

Deactivating the Function Lock :

1. Press ◷ .
2. Press **OK** to confirm.

11.4 SET + GO

The SET + GO function lets you set a heating function (or programme) and use it later with one press of the sensor field.

Activating the function:

1. Activate the appliance.
2. Set a heating function.
3. Press ◷ again and again until the display shows Duration .
4. Set the time.
5. Press ◷ again and again until the display shows SET + GO .
6. Press **OK** to confirm.

To start SET + GO , press a sensor field (except for ⏻). The set heating function starts.
When the heating function ends, an acoustic signal sounds.

Useful information:

- When the heating function operates, the function Function Lock is on.
- You can activate and deactivate the SET + GO function in the Basic Settings menu.

11.5 Automatic switch-off

For safety reasons the appliance deactivates after some time:

- If a heating function operates.
- If you do not change the oven temperature.

Temperature	Switch-off time
30 °C - 115 °C	12.5 h
120 °C - 195 °C	8.5 h
200 °C - 230 °C	5.5 h

The automatic switch-off works with all functions except Light , Duration and End Time .

11.6 Brightness of the display

There are two modes of display brightness:

- Night brightness - when the appliance is deactivated, the brightness of the display is lower between 10 PM and 6 AM.
- Day brightness:
  - When the appliance is activated.
  - If you touch a sensor field during the night brightness (apart from ON / OFF), the display goes back to the day brightness mode for the next 10 seconds.
  - If the appliance is deactivated and you set the function Minute Minder . When the function ends, the display goes back to the night brightness.

11.7 Cooling fan

When the appliance operates, the cooling fan activates automatically to keep the surfaces of the appliance cool. If you deactivate the appliance, the cooling fan can continue to operate until the appliance cools down.

12. HELPFUL HINTS AND TIPS

The temperature and baking times in the tables are guidelines only. They depend on the recipes and the quality and quantity of the ingredients used.

12.1 Advice for special heating functions of the oven

Keep Warm

Use this function if you want to keep food warm.
The temperature regulates itself automatically to 80 °C.

Plate Warming

For warming plates and dishes.
Distribute plates and dishes evenly on the oven shelf. Move stacks around after half of the warming time (swap top and bottom).
The automatic temperature is 70 °C.
Recommended shelf position: 3.

Dough Proving

You can use this automatic function with any recipe for yeast dough you like. It gives you a good atmosphere for rising. Put the dough into a dish that is big enough for rising and cover it with a wet towel or plastic foil. Insert a wire shelf on level one and put the dish in. Close the door and set the function dough proving. Set the necessary time.

12.2 Baking

General instructions

- Your new oven can bake or roast differently to the appliance you had before. Adapt your usual settings (temperature, cooking times) and shelf positions to the values in the tables.
- With longer baking times, you can deactivate the oven approximately 10 minutes before the end of the baking time and then use the residual heat.

When you cook frozen food, the trays in the oven can twist during baking.

When the trays become cold again, the distortions are gone.

How to use the Baking Tables

- The manufacturer recommends that you use the lower temperature the first time.
- If you cannot find the settings for a special recipe, look for the one that is almost the same.
- You can extend baking times by 10 – 15 minutes if you bake cakes on more than one level.
- Cakes and pastries at different heights do not always brown equally at first. If this occurs, do not change the temperature setting. The differences equalize during the baking procedure.

12.3 Tips on baking

Baking results	Possible cause	Remedy
The bottom of the cake is not browned sufficiently.	The shelf position is incorrect.	Put the cake on a lower shelf.
The cake sinks and becomes soggy, lumpy or streaky.	The oven temperature is too high.	The next time you bake, set a slightly lower oven temperature.
The cake sinks and becomes soggy, lumpy or streaky.	The baking time is too short.	Set a longer baking time. **You cannot decrease baking times by setting higher temperatures.**
The cake sinks and becomes soggy, lumpy or streaky.	There is too much liquid in the mixture.	Use less liquid. Be careful with mixing times, especially if you use a mixing machine.
The cake is too dry.	The oven temperature is too low.	The next time you bake, set a higher oven temperature.
The cake is too dry.	The baking time is too long.	The next time you bake, set a shorter baking time.
The cake browns unevenly.	The oven temperature is too high and the baking time is too short.	Set a lower oven temperature and a longer baking time.
The cake browns unevenly.	The mixture is unevenly distributed.	Spread the mixture evenly on the baking tray.
The cake is not ready in the baking time given.	The oven temperature is too low.	The next time you bake, set a slightly higher oven temperature.

12.4 Baking on one oven level

General instructions

- Your new oven may bake or roast differently to the appliance you had before. Adapt your usual settings (temperature, cooking times) and shelf levels to the values in the tables.

With longer baking times, the oven can be switched off about 10 minutes before the end of baking time, to use the residual heat.

When you use frozen food, the trays in the oven can twist during baking. When the trays get cold again, the distortion will be gone.

How to use the Baking Tables

- We recommend to use the lower temperature the first time.

If you cannot find the settings for a special recipe, look for the one that is almost the same.
Baking time can be extended by 10 - 15 minutes, if you bake cakes on more than one level.

Cakes and pastries at different heights do not always brown equally at first. If this occurs, do not change the temperature setting. The differences equalize during the baking procedure.

Baking in tins

Type of baking	Oven function	Shelf position	Temperature (°C)	Time (min)
Ring cake or brioche	True Fan Cooking	2	150 - 160	50 - 70
Madeira cake / Fruit cakes	True Fan Cooking	2	140 - 160	70 - 90
Sponge cake / Sponge cake	True Fan Cooking	2	140 - 150	35 - 50
Sponge cake / Sponge cake	Conventional Cooking	2	160	35 - 50
Flan base - short pastry 1)	True Fan Cooking	2	170 - 180	10 - 25
Flan base - sponge mixture	True Fan Cooking	2	150 - 170	20 - 25
Apple pie / Apple pie (2 tins Ø 20 cm, diagonally off set)	True Fan Cooking	2	160	70 - 90
Apple pie / Apple pie (2 tins Ø 20 cm, diagonally off set)	Conventional Cooking	1	180	70 - 90
Cheesecake, tray 2)	Conventional Cooking	1	160 - 170	60 - 90

1) Preheat the oven.
2) Use the deep pan.

Cakes / pastries / breads on baking trays

Type of baking	Oven function	Shelf position	Temperature (°C)	Time (min)
Plaited bread / bread crown	Conventional Cooking	2	170 - 190	30 - 40
Christmas stollen 1)	Conventional Cooking	2	160 - 180	50 - 70
Bread (rye bread) 1)	Conventional Cooking	2		
first of all			230	20
then			160 - 180	30 - 60

Type of baking	Oven function	Shelf position	Temperature (°C)	Time (min)
Cream puffs / eclairs 1)	Conventional Cooking	2	190 - 210	20 - 35
Swiss Roll 1)	Conventional Cooking	2	180 - 200	10 - 20
Cake with crumble topping (dry)	True Fan Cooking	3	150 - 160	20 - 40
Buttered almond cake / sugar cakes 1)	Conventional Cooking	2	190 - 210	20 - 30
Fruit flans (made with yeast dough / sponge mixture) 2)	True Fan Cooking	3	150 - 160	35 - 55
Fruit flans (made with yeast dough / sponge mixture) 2)	Conventional Cooking	1	170	35 - 55
Fruit flans made with short pastry	True Fan Cooking	3	160 - 170	40 - 80
Yeast cakes with delicate toppings (e.g. quark, cream, custard) 1)	Conventional Cooking	2	160 - 180	40 - 80

Biscuits

Food	Oven function	Shelf position	Temperature (°C)	Time (min)
Short pastry biscuits	True Fan Cooking	3	150 - 160	10 - 20
Short bread / Short bread / Pastry Stripes	True Fan Cooking	3	140	20 - 35
Short bread / Short bread / Pastry Stripes 1)	Conventional Cooking	2	160	20 - 30
Biscuits made with sponge mixture	True Fan Cooking	2	150 - 160	15 - 20
Pastries made with egg white, meringues	True Fan Cooking	1	80 - 100	120 - 150
Macaroons	True Fan Cooking	3	100 - 120	30 - 50
Biscuits made with yeast dough	True Fan Cooking	3	150 - 160	20 - 40
Puff pastries 1)	True Fan Cooking	3	170 - 180	20 - 30

Food	Oven function	Shelf position	Temperature (°C)	Time (min)
Rolls [1]	Conventional Cooking	2	190 - 210	10 - 25
Small cakes / Small cakes [1]	True Fan Cooking	3	160	20 - 35
Small cakes / Small cakes [1]	Conventional Cooking	2	170	20 - 35

12.5 Multileveled baking

Cakes / pastries / breads on baking trays

Type of baking	True Fan Cooking Shelf positions from bottom 2 shelf positions	Temperature (°C)	Time (min)
Cream puffs / Eclairs [1]	1 / 3	160 - 180	25 - 45
Dry streusel cake	1 / 3	150 - 160	30 - 45

[1] Preheat the oven.

Biscuits / small cakes / pastries / rolls

Type of baking	True Fan Cooking Shelf positions from bottom 2 shelf positions	Temperature (°C)	Time (min)
Short pastry biscuits	1 / 3	150 - 160	20 - 40
Short bread / Short bread / Pastry Stripes	1 / 3	140	25 - 45
Biscuits made with sponge mixture	1 / 3	160 - 170	25 - 40
Pastries made with egg white, meringues	1 / 3	80 - 100	130 - 170
Macaroons	1 / 3	100 - 120	40 - 80
Biscuits made with yeast dough	1 / 3	160 - 170	30 - 60

12.6 Slow Cook Table

- Use the function to prepare lean, tender pieces of meat and fish. Cook without a lid.
- Sear the meat in a pan in a very high heat.
- Put the meat in a roasting dish or directly on the wire shelf. Put the deep pan below the shelf to catch the fat.

Slow Cook table

Food to be cooked	Weight	Temperature (°C)	Shelf position	Time (min)
Roast beef	1 - 1,5 kg	150	1	120 - 150
Fillet of beef	1 - 1,5 kg	150	1	90 - 110
Roast veal	1 - 1,5 kg	150	1	120 - 150
Steak	200 - 300 g	120	1	20 - 40

12.7 Pizza Setting

Type of baking	Shelf position	Temperature (°C)	Time (min)
Pizza (thin crust)[1]	3	200 - 230	15 - 20
Pizza (with a lot of topping) [2]	3	180 - 200	20 - 30
Tarts	3	180 - 200	40 - 55
Spinach flan	3	160 - 180	45 - 60
Quiche Lorraine (Savoury flan)	3	170 - 190	45 - 55
Swiss Flan	3	170 - 190	45 - 55
Cheesecake	2	140 - 160	60 - 90
Apple cake, covered	2	150 - 170	50 - 60
Vegetable pie	3	160 - 180	50 - 60
Unleavened bread [1]	3	230	10 - 20
Puff pastry flan [1]	3	160 - 180	45 - 55
Flammekuchen [1]	3	230	12 - 20
Piroggen (Russian version of calzone) [1]	3	180 - 200	15 - 25

[1] Preheat the oven.

[2] Use the deep pan.

12.8 Roasting table

Roasting dishes

- Large roasting joints can be roasted directly in the deep pan or on the wire shelf above the deep pan (if present).
- Roast lean meats in a roasting tin with a lid. This will keep the meat more succulent.
- All types of meat, that can be browned or have crackling, can be roasted in the roasting tin without the lid.
- Use heat-resistant ovenware to roast (refer to the instructions of the manufacturer).
- You can roast large roasting joints directly in the deep pan (if present) or on the wire shelf above the deep pan.
- Roast lean meats in the roasting tin with the lid. This keeps the meat more succulent.
- All types of meat that can be browned or have crackling can be roasted in the roasting tin without the lid.

- We recommend that you cook meat and fish weighing 1 kg and above in the oven.
- To prevent the meat juices or fat from burning onto the pan, put some liquid into the deep pan.
- If necessary, turn the roast (after 1 / 2 - 2 / 3 of the cooking time).
- Baste large roasts and poultry with their juices several times during roasting. This gives better roasting results.
- You can deactivate the appliance approximately 10 minutes before the end of the roasting time, and use the residual heat.

Beef

Type of meat	Quantity	Oven function	Microwave setting	Shelf position	Temperature (°C)	Time (min)
Pot roast	1 - 1.5 kg	Conventional Cooking	200 W	1	230	60 - 80

Pork

Type of meat	Quantity	Oven function	Microwave setting	Shelf position	Temperature (°C)	Time (min)
Shoulder, neck, ham joint	1 - 1.5 kg	Turbo Grilling	200 W	1	160 - 180	50 - 70
Meat loaf	750 g - 1 kg	Turbo Grilling	200 W	1	160 - 170	35- 50
Pork knuckle (pre-cooked)	750 g - 1 kg	Turbo Grilling	200 W	1	150 - 170	60 - 75

Veal

Type of meat	Quantity	Oven function	Microwave setting	Shelf position	Temperature (°C)	Time (min)
Roast veal	1 kg	Turbo Grilling	200 W	1	160 - 180	50 - 70
Knuckle of veal	1.5 - 2 kg	Turbo Grilling	200 W	1	160 - 180	75 - 100

Lamb

Type of meat	Quantity	Oven function	Microwave setting	Shelf position	Temperature (°C)	Time (min)
Leg of lamb, roast lamb	1 - 1.5 kg	Turbo Grilling	200 W	1	150 - 170	50 - 70

Poultry

Type of meat	Quantity	Oven function	Microwave setting	Shelf position	Temperature (°C)	Time (min)
Poultry portions	200 - 250 g each	Turbo Grilling	200 W	1	200 - 220	20 - 35
Chicken half	400 - 500 g each	Turbo Grilling	200 W	1	190 - 210	25 - 40
Chicken, poulard	1 - 1.5 kg	Turbo Grilling	200 W	1	190 - 210	30 - 45
Duck	1.5 - 2 kg	Turbo Grilling	200 W	1	180 - 200	45- 65

Fish (steamed)

Type of meat	Quantity	Oven function	Microwave setting	Shelf position	Temperature (°C)	Time (min)
Whole fish	1 - 1.5 kg	Conventional Cooking	200 W	1	210 - 220	30 - 45

Dishes

Type of dish	Oven function	Microwave setting	Shelf position	Temperature (°C)	Time (min)
Dishes sweet	True Fan Cooking	200 W	1	210 - 220	30 - 45
Dishes savory with cooked ingredients (noodles, vegetables)	True Fan Cooking	400 – 600 W	1	160 - 180	20 - 40
Dishes savory with raw ingredients (potatoes, vegetables)	True Fan Cooking	400 – 600 W	2	160 - 180	30 - 45

12.9 Grilling

Always grill with the maximum temperature setting.

CAUTION!
Always grill with the oven door closed.

Always preheat the empty oven with the grill functions for 5 minutes.

- Set the shelf in the shelf level as recommended in the grilling table.
- Always set the pan to collect the fat into the first shelf level.

- Grill only flat pieces of meat or fish.

Grilling

Food to be grilled	Temperature (°C)	Oven level	Grilling time (min)	
			1st side	2nd side
Roast beef, medium	210 - 230	1	30 - 40	30 - 40
Filet of beef, medium	230	1	20 - 30	20 - 30
Back of pork	210 - 230	1	30 - 40	30 - 40
Back of veal	210 - 230	1	30 - 40	30 - 40
Back of lamb	210 - 230	1	25 - 35	20 - 35
Whole Fish, 500 - 1000 g	210 - 230	1	15 - 30	15 - 30

Fast Grilling

Food to be grilled [1]	Oven level	Grilling time (min)	
		1st side	2nd side
Burgers / Burgers	3	9 - 13	8 - 10
Pork fillet	2	10 - 12	6 - 10
Sausages	3	10 - 12	6 - 8
Fillet steaks, veal steaks	3	7 - 10	6 - 8
Toast / Toast	3	1 - 3	1 - 3
Toast with topping	2	6 - 8	-

[1] Preheat the oven.

12.10 Convenience food

- Remove the food packaging. Put the food on a plate.
- Do not cover it with a bowl or a plate. This can extend the defrost time.
- Use the first shelf position. The one on the bottom.

Frozen Foods

Convenience food	Shelf position	Temperature (°C)	Time (min)
Pizza, frozen	3	200 - 220	15 - 25
Pizza American, frozen	3	190 - 210	20 - 25
Pizza, chilled	3	210 - 230	13 - 25
Pizza Snacks, frozen	3	180 - 200	15 - 30
French Fries, thin[1]	3	200 - 220	20 - 30

Convenience food	Shelf position	Temperature (°C)	Time (min)
French Fries, thick[1)]	3	200 - 220	25 - 35
Wedges / Croquettes[1)]	3	220 - 230	20 - 35
Hash Browns	3	210 - 230	20 - 30
Lasagne / Cannelloni, fresh	2	170 - 190	35 - 45
Lasagne / Cannelloni, frozen	2	160 - 180	40 - 60
Oven baked cheese	2	170 - 190	20 - 30
Chicken Wings	3	190 - 210	20 - 30

1) Turn products 2 or 3 times during roasting.

Frozen Ready Meals Table

Food to be cooked	Oven functions	Shelf position	Temperature (°C)	Time
Frozen pizza[1)]	Conventional Cooking	2	as per manufacturer's instructions	as per manufacturer's instructions
Chips [2)] (300 - 600 g)	Conventional Cooking or Turbo Grilling	2	200 - 220	as per manufacturer's instructions
Baguettes[1)]	Conventional Cooking	2	as per manufacturer's instructions	as per manufacturer's instructions
Fruit cake	Conventional Cooking	2	as per manufacturer's instructions	as per manufacturer's instructions

1) Preheat the oven

2) Turn chips 2 or 3 times during cooking

12.11 Defrosting

- Remove the food packaging. Put the food on a plate.
- Do not cover it with a bowl or a plate. This can extend the defrost time.
- Use the first oven shelf level. The one on the bottom.

Defrosting table

Food	Quantity	Defrosting time in min	Further defrosting time in min	Comment
Chicken	1 kg	100 - 140	20 - 30	Put the chicken on an upturned saucer in a big plate. Turn halfway through
Meat	1 kg	100 - 140	20 - 30	Turn halfway through
Meat	0,5 kg	90 - 120	20 - 30	Turn halfway through
Trout	150 g	25 - 35	10 - 15	---
Strawberries	300 g	30 - 40	10 - 20	---
Butter	250 g	30 - 40	10 - 15	---
Cream	2 x 200 g	80 - 100	10 - 15	Whip the cream when still slightly frozen in places
Gateau	1,4 kg	60	60	---

12.12 Making preserves

- Use only preserve jars of the same dimensions available on the market.
- Do not use jars with twist-off and bayonet type lids, or metal tins.
- Use the first shelf from the bottom for this function.
- Put no more than six one-litre preserve jars on the baking tray.
- Fill the jars up to the same level and close with a clamp.
- The jars cannot touch each other.
- Put approximately 1 / 2 litre of water into the baking tray to give sufficient moisture in the oven.
- When the liquid in the jars starts to simmer (after approx. 35 - 60 minutes with one-litre jars), stop the oven or decrease the temperature to 100°C (see the table).

Preserves table - Soft Fruits

Preserve	Temperature (°C)	Cooking time until simmering (min)	Cooking time at 100 °C (min)
Strawberries, blueberries, raspberries, ripe gooseberries	160 - 170	35 - 45	---

Preserves table - Stone fruits

Preserve	Temperature (°C)	Cooking time until simmering (min)	Cooking time at 100 °C (min)
Pears, quinces, plums	160 - 170	35 - 45	10 - 15

Preserves table - Vegetables

Preserve	Tempera-ture (°C)	Cooking time until simmering (min)	Cooking time at 100 °C (min)
Carrots [1)]	160 - 170	50 - 60	5 - 10
Cucumbers	160 - 170	50 - 60	---
Mixed pickles	160 - 170	50 - 60	15
Kohlrabi, peas, asparagus	160 - 170	50 - 60	15 - 20

[1)] Keep in the oven after you stop the oven

12.13 Drying

Oven function: True Fan Cooking

Food	Temperature (°C)	Shelf position	Time (h)
Beans	60 - 70	3	6 - 8
Peppers	60 - 70	3	5 - 6
Vegetables for soup	60 - 70	3	5 - 6
Mushrooms	50 - 60	3	6 - 8
Herbs	40 - 50	3	2 - 3
Plums	60 - 70	3	8 - 10
Apricots	60 - 70	3	8 - 10
Apple slices	60 - 70	3	6 - 8
Pears	60 - 70	3	6 - 9

12.14 Bread Baking

Preheating is not recommended.

Type of baking	Oven func-tion	Oven level	Temperature °C	Time in min
White Bread	Bread Baking	2	180 - 200	40 - 60
Baguette	Bread Baking	2	200 - 220	35 - 45
Brioche	Bread Baking	2	160 - 180	40 - 60
Ciabatta	Bread Baking	2	200 - 220	35 - 45
Rye Bread	Bread Baking	2	180 - 200	50 - 70
Dark Bread	Bread Baking	2	180 - 200	50 - 70
All Grain bread	Bread Baking	2	170 - 190	60 - 90

Microwave Cooking Table

Defrosting meat

Food	Microwave				
	Weight (g)	Power (Watts)	Time (min)	Standing time (min)	Comments
Whole cuts of meat	500	200	10 - 12	10 - 15	Turn halfway through
Steak	200	200	3 - 5	5 - 10	Turn halfway through; remove defrosted parts
Mixed minced meat	500	200	10 - 15	10 - 15	Turn halfway through; remove defrosted parts
Goulash	500	200	10 - 15	10 - 15	Turn halfway through; remove defrosted parts

Defrosting poultry

Food	Microwave				
	Weight (g)	Power (Watts)	Time (min)	Standing time (min)	Comments
Chicken	1000	200	25 - 30	10 - 20	Turn halfway through; cover defrosted parts with aluminium foil
Chicken breast	100 - 200	200	3 - 5	10 - 15	Turn halfway through; cover defrosted parts with aluminium foil
Chicken thighs	100 - 200	200	3 - 5	10 - 15	Turn halfway through; cover defrosted parts with aluminium foil
Duck	2000	200	45 - 60	20 - 30	Turn halfway through; cover defrosted parts with aluminium foil

Defrosting fish

Food	Microwave				
	Weight (g)	Power (Watts)	Time (min)	Standing time (min)	Comments
Whole Fish	500	100	10 - 15	15 - 20	Turn halfway through
Fish fillets	500	100	10 - 12	15 - 20	Turn halfway through

Defrosting sausage

Food	Microwave				
	Weight (g)	Power (Watts)	Time (min)	Standing time (min)	Comments
Sliced sausage	100	100	2 - 4	20 - 40	Turn halfway through

Defrosting dairy products

Food	Microwave				
	Weight (g)	Power (Watts)	Time (min)	Standing time (min)	Comments
Quark	250	100	10 - 15	25 - 30	Remove aluminium parts, turn halfway through
Butter	250	100	3 - 5	15 - 20	Remove aluminium parts, turn halfway through
Cheese	250	100	3 - 5	30 - 60	Remove aluminium parts, turn halfway through
Cream	200	100	7 - 12	20 - 30	Remove aluminium top, stir halfway through

Defrosting cakes / pastries

Food	Microwave				
	Weight (g)	Power (Watts)	Time (min)	Standing time (min)	Comments
Yeast dough	1 piece	100	2 - 3	15 - 20	Turn plate halfway through

Food	Microwave				
	Weight (g)	Power (Watts)	Time (min)	Standing time (min)	Comments
Cheesecake	1 piece	100	2 - 4	15 - 20	Turn plate halfway through
Cake (gateau)	1 piece	100	1 - 2	15 - 20	Turn plate halfway through
Dry cake (e. g. Pound cake)	1 piece	100	2 - 4	15 - 20	Turn plate halfway through
Fruit cake	1 piece	100	1 - 2	15 - 20	Turn plate halfway through
Bread	1000	100	15 - 20	10 - 15	Turn halfway through
Sliced bread	500	100	8 - 12	10 - 15	Turn halfway through
Bread rolls	4 rolls	100	5 - 8	5 - 10	Turn halfway through

Defrosting Fruit

Food	Microwave				
	Weight (g)	Power (Watts)	Time (min)	Standing time (min)	Comments
Strawberries	300	100	8 - 12	10 - 15	Defrost covered, stir halfway through
Plums, cherries, raspberries, blackcurrants, apricots	250	100	8 - 10	10 - 15	Defrost covered, stir halfway through

Cooking / Melting

Food	Microwave				
	Weight (g)	Power (Watts)	Time (min)	Standing time (min)	Comments
Chocolate / Chocolate coating	150	600	2 - 3	---	Stir halfway through
Butter	100	200	2 - 4	---	Stir halfway through

Defrosting heating

Food	Microwave				
	Weight (g)	Power (Watts)	Time (min)	Standing time (min)	Comments
Baby food in jars	200	300	2 - 3	---	Stir halfway through; check temperature!
Baby milk (bottle, 180 ml)	200	1000	0:20 - 0:40	---	Put spoon into bottle, stir and check temperature!
Convenience food	400 - 500	600	4 - 6	5	Remove any aluminium lids, turn halfway through
Frozen ready meals	400 - 500	400	14 - 20	5	Remove any aluminium lids, turn halfway through
Milk	1 cup approx. 200 ml	1000	1:15 - 1:45	---	Put spoon in the container
Water	1 cup approx. 200 ml	1000	1:30 - 2	---	Put spoon in the container
Sauce	200 ml	600	1 - 2	---	Stir halfway through
Soup	300 ml	600	2 - 4	---	Stir halfway through

Cooking table

Food	Microwave				
	Weight (g)	Power (Watts)	Time (min)	Standing time (min)	Comments
Whole fish	500	500	8 - 10	---	Cook covered, turn container several times during cooking
Fish fillets	500	500	6 - 8	---	Cook covered, turn container several times during cooking
Vegetables, short cooking time, fresh **1)**	500	600	12 - 16	---	Add approx. 50 ml water, cook covered, stir halfway through

Food	Microwave				
	Weight (g)	Power (Watts)	Time (min)	Standing time (min)	Comments
Vegetables, short cooking time, frozen **1)**	500	600	14 - 18	---	Add approx. 50 ml water, cook covered, stir halfway through
Vegetables, long cooking time, fresh **1)**	500	600	14 - 20		Add approx. 50 ml water, cook covered, stir halfway through
Vegetables, long cooking time, frozen **1)**	500	600	18 - 24	---	Add approx. 50 ml water, cook covered, stir halfway through
Potatoes in their jacket	800 g + 600 ml	1000	5 - 7	300 W / 15 - 20	Cook covered, stir halfway through
Rice	300 g + 600 ml	1000	4 - 6	---	Cook covered, stir halfway through
Popcorn	-	1000	3 — 4	-	Put the popcorn on a plate on the bottom level

1) Cook all vegetables with a cover on the container. The times given are guidelines only and depend upon the type and qualities of the foodstuffs.

Combi-Function Table

(for selected models only)

Preheat Crostino plate: 4 minutes at 700 Watt

Cooking functions: Grilling + microwave

Food	Baking / roasting dishes	Temp. (°C)	Microwave (Watt)	Shelf position	Time (min)	Comments
2 chicken halves (2 x 600 g)	Glass dish with strainer	220	300	2	40	Turn after 20 min., standing time 5 min.
au gratin potatoes (1 kg)	Gratin dish	200	300	2	40	10 min. standing time
Roast pork neck (1100 g)	Glass dish with strainer	200	300	1	70	Turn in between, 10 min. standing time

Food	Baking / roasting dishes	Temp. (°C)	Micro-wave (Watt)	Shelf position	Time (min)	Comments
Apple cake	Crostino plate on bottom glass. with pastry max. 5 min. / preheat 1000 Watt, turn 1 x	220	400	-	25	Turn in between
Cheese cake, frozen (2 x 70 g)	Crostino plate on bottom glass. Max. 4 min. / preheat at 700 Watt, turn 1 x	230	200	-	25	Turn in between
Ham and cheese toast, frozen (2 x 100 g)	Crostino plate on bottom glass. Max. 4 min. / preheat at 700 Watt, turn 1 x	230	200	-	20	Turn after 15 min.
Hamburger frozen (2 x 90 g)	Crostino plate on bottom glass. Max. 4 min. / preheat at 700 Watt, turn 1 x	230	300	-	20	Turn after 12 min.
Pizza frozen Ø 28 cm (320 g)	Crostino plate on bottom glass. Max. 4 min. / preheat at 700 Watt, turn 1 x	230	200	-	15	Turn in between

The cooking times and temperatures are guidelines only and depend upon the type and qualities of the foodstuffs.

Tips for the microwave

Result	Remedy
You cannot find details for the amount of food prepared.	Look for a similar food. Increase or shorten the length of the cooking times according to the following rule: **Double the amount = almost double the timeHalf the amount = half the time**
The food has got too dry.	Set shorter cooking time or select lower microwave power.
The food is still not defrosted, hot or cooked after the time has elapsed.	Set longer cooking time or select higher microwave power. Please note that taller dishes need longer.
After the cooking time has elapsed, the food is overheated at the edge but is still not ready in the middle.	Next time select a lower power and a longer time. Stir liquids, e. g. soup, halfway through.

13. CARE AND CLEANING

WARNING!
Refer to the Safety chapters.

Notes on cleaning:

- Clean the front of the appliance with a soft cloth with warm water and a cleaning agent.
- To clean metal surfaces, use a usual cleaning agent.
- Clean the appliance interior after each use. Then you can remove dirt more easily and it does not burn on.
- Clean stubborn dirt with a special oven cleaner.
- Clean all accessories after each use and let them dry. Use a soft cloth with warm water and a cleaning agent.
- If you have nonstick accessories, do not clean them using aggressive agents, sharp-edged objects or a dishwasher. It can cause damage to the nonstick coating.

13.1 Shelf support

Removing the shelf support

You can remove the shelf support to clean the side walls.

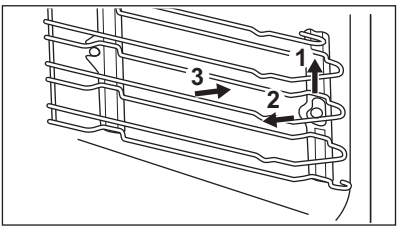

1. Carefully pull the supports up and out of the front catch.
2. Lightly move the supports on the front catch inwards.
3. Pull the supports out of the rear catch.

Installing the shelf support

To install the shelf support follow the procedure in the opposite order.

13.2 Lamp

WARNING!
There is a risk of electrical shock. The lamp and the lamp glass cover can be hot.

Before you change the lamp:

- Deactivate the appliance.
- Remove the fuses from the fuse box or deactivate the circuit breaker.

CAUTION!
Put a cloth on the bottom of the interior of the appliance. It prevents damage to the lamp glass cover and the cavity.
Always use the same lamp type.

Replacing the lamp at the cavity ceiling:

1. Turn the lamp glass cover counterclockwise to remove it.
2. Clean the glass cover.
3. Replace the lamp with a suitable 300 °C heat-resistant lamp.
4. Install the glass cover.

14. WHAT TO DO IF…

WARNING!
Refer to the Safety chapters.

Problem	Possible cause	Remedy
The appliance does not heat up.	The appliance is deactivated.	Activate the appliance.

Problem	Possible cause	Remedy
The appliance does not heat up.	The clock is not set.	Set the clock.
The appliance does not heat up.	The necessary settings are not set.	Check the settings.
The appliance does not heat up.	The Child Lock is activated.	Refer to "Activating and de-activating the Child Lock function".
The appliance does not heat up.	The door is not closed correctly.	Fully close the door.
The appliance does not heat up.	The fuse is released.	Make sure that the fuse is the cause of the malfunction. If the fuse releases again and again, contact a qualified electrician.
The lamp does not operate.	The lamp is defective.	Replace the lamp.

If you cannot find a solution to the problem yourself, contact your dealer or the service centre.

The necessary data for the service centre is on the rating plate. The rating plate is on the front frame of the appliance cavity.

We recommend that you write the data here:

Model (MOD.) .....

Product number (PNC) .....

Serial number (S.N.) .....

15. INSTALLATION

WARNING!
Refer to the Safety chapters.

The built-in unit must meet the stability requirements of DIN 68930.

The oven is designed to be connected to 230 - 240V ~ (50Hz) electricity supply. The oven has an easily accessible terminal block which is marked as follows:

Letter L - Live terminal
Letter N - Neutral terminal
⏚ - Earth terminal

CAUTION!
This oven must be earthed!

The cable used to connect the oven to the electrical supply must comply to the specifications given below.
For UK use only

Connection via	Min. size Cable/ flex	Cable/flex type	Fuse
Cooker Control Circuit	2,5 mm^2	PVC / PVC twin and earth	min: 15 A max: 20 A

It is necessary that you install a double pole switch between the oven and the electricity supply (mains), with a minimum gap of 3 mm between the switch contacts and of a type suitable for the required load in compliance with the current regulations.

The switch must not break the yellow and green earth cable at any point.

After installation and connecting, the cable must be placed so that it cannot at any point reach a temperature of more than 50°C above the ambient temperature.
Before the oven is connected, check that the main fuse and the domestic installation can support the load; and that the power supply is properly earthed.

The manufacturer declines any responsibility should these safety measures not be carried out.

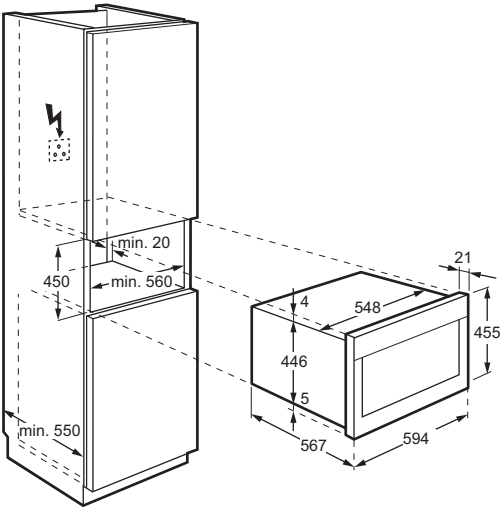

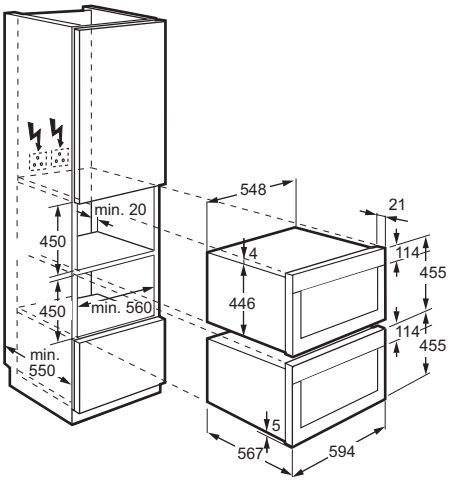

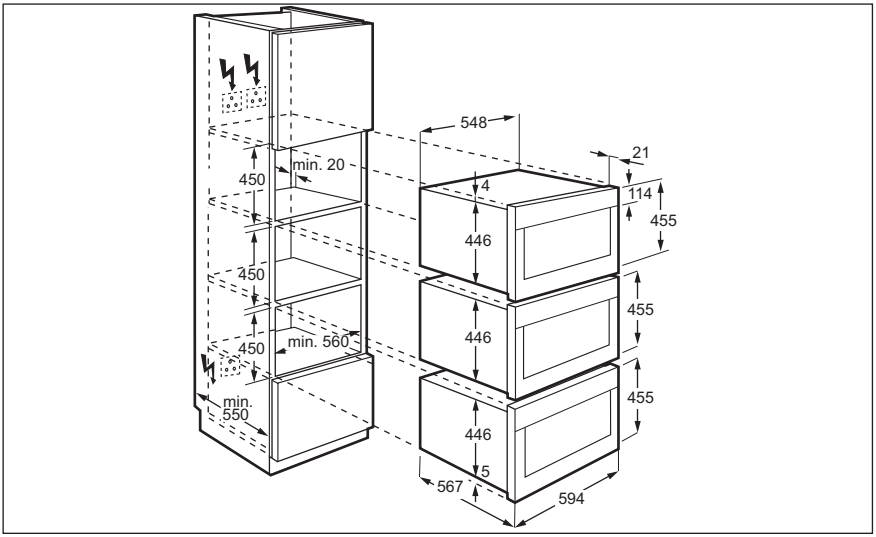
548
21
min. 20
450
4
114
455
446
450
455
446
450
min. 560
min.
550
455
446
5
567
594

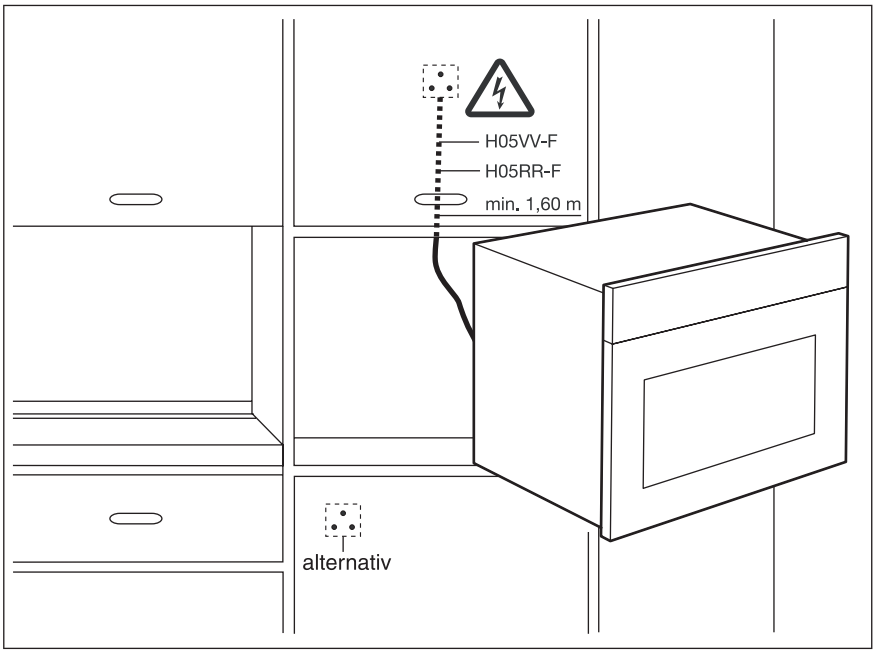
H05VV-F
H05RR-F
min. 1,60 m
alternativ

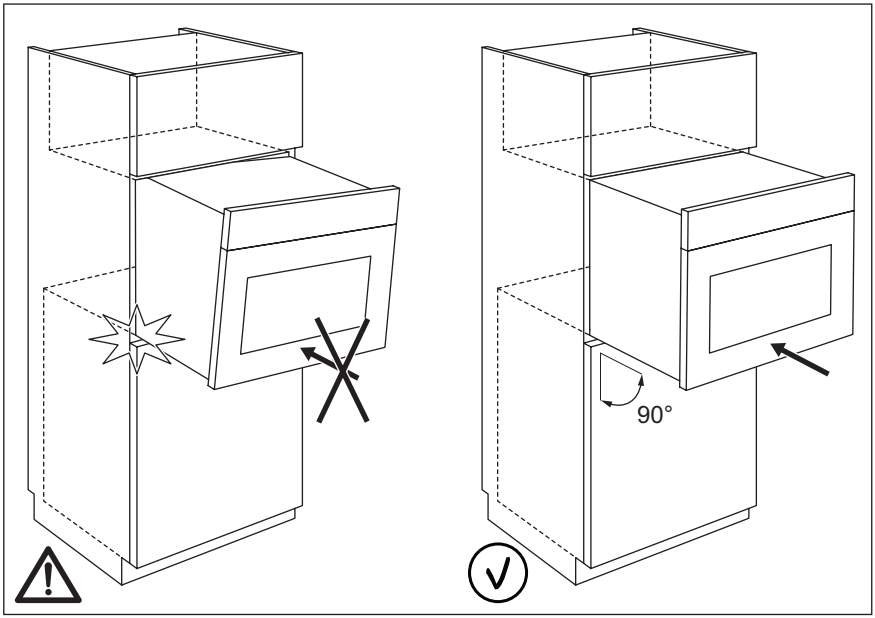
90°

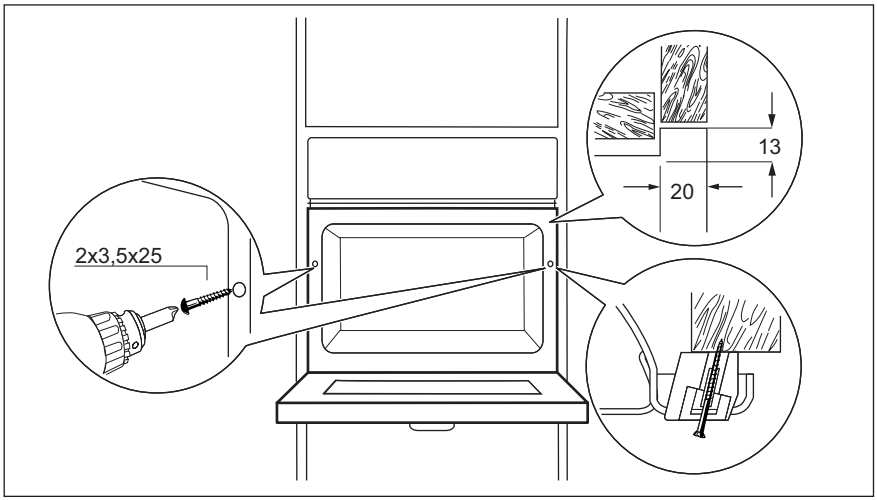
2x3,5x25
13
20

16. GB IE GREAT BRITAIN & IRELAND - GUARANTEE/ CUSTOMER SERVICE

16.1 Standard guarantee conditions:

We, Electrolux, undertake that if within 12 months of the date of the purchase this Electrolux appliance or any part thereof is proved to be defective by reason only of faulty workmanship or materials, we will, at our option repair or replace the same FREE OF CHARGE for labour, materials or carriage on condition that:

- Appliance has been correctly installed and used only on the electricity supply stated on the rating plate.
- Appliance has been used for normal domestic purposes only, in accordance with manufacturer's instructions.
- Appliance hasn't been serviced, maintained, repaired, taken apart or tampered with by person not authorised by us.
- Electrolux Service Force Centre must undertake all service work under this guarantee
- Any appliance or defective part replaced shall become the Company's property.
- This guarantee is in addition to your statutory and other legal rights.

Exclusions

- Damage, calls resulting from transport, improper use, neglect, light bulbs, removable parts of glass, plastic.
- Costs for calls to put right appliance which is improperly installed, calls to appliances outside United Kingdom.
- Appliances found to be in use within a commercial environment, plus those which are subject to rental agreements.
- Products of Electrolux manufacturer that are not marketed by Electrolux

Service and Spare Parts. Please contact your local Service Force Centre: **08445 616 616**(Call will be routed to Service Force Centre covering your postcode area). For address of local Service Force Centre and further information, please visit: **www.serviceforce.co.uk** Before calling out an engineer, please ensure you have read the details under the heading "What to do if... / Troubleshooting". When you contact the Service Force Centre you will need to give the following details: Your name, address and postcode, your telephone number, clear concise details of the fault, model and serial number of the appliance (found on the rating plate), the purchase date. Please note a valid purchase receipt or guarantee documentation is required for in guarantee service calls.

Customer Care. Please contact our Customer Care Department: Electrolux Major Appliances, Addington Way, Luton, Bedfordshire, LU4 9QQ or visit our website at www.electrolux.co.uk

Customer Care Department,	Tel: (Calls may be recorded for training purposes)
Electrolux	08445 613 613
AEG-Electrolux	08445 611 611
Zanussi-Electrolux	08445 612 612

For Customer Service in The Republic of Ireland please contact us at the address below:

Electrolux Group (Irl) Ltd, Long Mile Road, Dublin 12, Republic of Ireland
Tel: +353 (0)1 4090751, Email: service.eid@electrolux.ie

17. ENVIRONMENT CONCERNS

Recycle the materials with the symbol ♲. Put the packaging in applicable containers to recycle it.
Help protect the environment and human health and to recycle waste of electrical and electronic appliances. Do not dispose appliances marked with the symbol with the household waste. Return the product to your local recycling facility or contact your municipal office.

www.electrolux.com/shop

892964428-A-452013