Register your new Bosch now:
www.bosch-home.com/welcome

Washing machine
WIW...V0

BOSCH

en Instruction Manual and Installation Instructions

Your new washing machine

You have chosen a Bosch washing machine.

Please take a few minutes to read and become familiar with the advantages of your washing machine.

To meet the high quality demands required by Bosch, every washing machine that leaves our factory is carefully checked to ensure that it functions correctly and is in perfect condition.

For more information on our products, accessories, replacement parts and services, see our website www.bosch-home.com or contact our after-sales service centres.

If the operating and installation instructions describe different models, any differences will be pointed out at the relevant points in the text.

Read these operating and installation instructions before switching on the washing machine.

Display rules

⚠ Warning!

This combination of symbol and signal word indicates a possibly dangerous situation. Not heeding the warning can cause death or injuries.

Caution!

This signal word indicates a possibly dangerous situation. Not heeding the caution can cause property and/or environmental damage.

Note/tip

Information about the optimum use of the appliance/any other useful information.

1. 2. 3. / a) b) c)

The steps are represented by numbers or letters.

■ / -

Lists are represented by a small box or a dash.

Contents

Intended use 5

Safety instructions 6

Children/people/pets 6
Installation. 7
Operation 10
Cleaning/Maintenance 11

Environmental protection 13

Packaging/used appliance 13
Tips on economical use 13

Positioning and connecting . . . 14

Included with the appliance 14
Safety instructions. 15
Installation surface 15
Installation on a slide sheet 15
Installing the appliance below a high worktop. 16
Installation on a base or a wooden joist floor 16
Installation on a platform with drawer 16
Removing the transport locks. 17
Hose and cable lengths 18
Water inlet. 19
Water outlet 20
Levelling 20
Electrical connection. 21
Installing the appliance 22
Before washing for the first time 27
Transportation. 28

Getting to know the appliance 29

Washing machine 29
TimeLight (depends on the model). . 29
Control panel 30
Display panel 31

Laundry 32

Prepare the laundry. 32
Sorting laundry 32
Starching. 33
Dyeing/bleaching 33
Soaking 33

Detergent 34

Correct selection of detergent. 34
Saving energy and detergent 34

Programme default settings. . . 35

Spin speed 35
Ready in 35

Additional programme settings. 36

Speed/Eco 36

Operating the appliance 37

Preparing the washing machine 37
Select programme/switch on the appliance. 37
Change the programme default settings 37
Select additional programme settings 37
Placing laundry into the drum 38
Measure and add detergent and care products 38
Start the programme 39
Childlock 39
Adding laundry 40
Changing the programme 40
Cancel the programme 40
Programme end during rinse hold. . . 40
Programme end 40
Removing laundry/switching off the appliance. 41

Sensors 42

Automatic load sensing. 42
Unbalanced load detection system . . 42
VoltCheck 42

Setting the signal 43

Cleaning and maintenance . . . 44

Machine housing/control panel 44
Drum 44
Descaling. 44
Detergent drawer and housing 45
The drain pump is blocked, emergency draining. 46
The drain hose at the siphon is blocked 47
Filter in the water supply blocked . . 48

Faults and what to do about them. 49

Emergency release 49
Information on the display panel . . . 50
Faults and what to do about them. . 51

After-sales service 53

Technical data 54

Aqua-Stop warranty 55

Intended use

- This appliance is intended for private domestic use only.
- Do not install or operate this appliance anywhere that is liable to experience frost and/or outdoor conditions. There is a risk that the appliance will be damaged if residual water in it freezes. If hoses freeze up, they may crack/burst.
- This appliance must only be used for washing domestic laundry, consisting of machine-washable items and hand-washable woollens (see label on item). Using the appliance for any other purpose is outside of the scope of its intended application and is forbidden.
- This appliance is suitable for operation with mains water and commercially available detergents and care products (must be suitable for use in washing machines).
- This appliance is intended for use up to a maximum height of 4000 metres above sea level.

Before you switch on the appliance:

Check that there is no visible damage to the appliance. Do not operate the appliance if it is damaged. Should you have any problems, please contact your specialist dealer or our customer service.

Read and follow the operating and installation instructions and all other information provided with this appliance.

Retain the documents for subsequent use or for subsequent owners.

⚠ Safety instructions

The following safety information and warnings are provided to protect you from injury and to prevent material damage to your surroundings.

It is nevertheless important to take the necessary precautions and to proceed with care when installing, maintaining, cleaning and operating the appliance.

Children/people/pets

⚠ Warning
Risk of death!
Children and other people who are unable to assess the risks involved when using the appliance may injure themselves or may find themselves in life-threatening situations. Therefore please note:

- The appliance may be used by children over the age of 8 years and by persons with reduced physical, sensory or mental capacity or by persons with a lack of experience or knowledge as long as they are supervised or have received instruction on how to use the appliance safely and they have understood the potential risks of using the appliance.
- Children must not play with this appliance.
- Do not allow children to clean or maintain this appliance unsupervised.
- Keep children under 3 years and pets away from this appliance.
- Do not leave the appliance unattended when children or other people who are unable to assess the risks are in the vicinity.

⚠ Warning
Risk of death!
Children may lock themselves inside appliances and find themselves in a life-threatening situation.

- Do not position the appliance behind a door, as this may obstruct the appliance door or prevent it from opening completely.
- Once an appliance has reached the end of its life, pull the mains plug from the socket **before** severing the mains cable, and then destroy the lock on the appliance door.

⚠ Warning
Risk of suffocation!
If allowed to play with the packaging/plastic film or packing components, children may become caught in these or pull them over their heads and suffocate.
Keep packaging, plastic film and packing components away from children.

⚠ Warning
Risk of poisoning!
Detergents and care products may result in poisoning if consumed.
If accidentally swallowed, seek medical advice. Keep detergents and care products out of the reach of children.

⚠ Warning
Risk of burns!
When washing at high temperatures, the glass in the appliance door becomes hot. Stop children from touching the appliance door when it is hot.

⚠ Warning
Eye/skin irritation!
Contact with detergents or care products may cause eye/skin irritation.
Rinse eyes/skin thoroughly if they/it come(s) into contact with detergents or care products. Keep detergents and care products out of the reach of children.

Installation

⚠ Warning
Risk of electric shock/fire/ material damage/damage to the appliance!
If the appliance is not installed properly, this may lead to a dangerous situation. Make sure that:

- The mains voltage on your power socket matches the rated voltage specified on the appliance (identification plate). The connected loads and the required fuse protection are specified on the identification plate.
- The appliance is only connected to a source of alternating current via a nationally recognized and grounded outlet that has been correctly installed.
- The mains plug and the grounded socket match and the earthing system has been correctly installed.
- The cross section of the cable is sufficiently large enough.
- The mains plug is accessible at all times.
- If using a residual current circuit breaker, only use one that bears the following mark: ⊠. The presence of this mark is the only way to be sure that it fulfils all the applicable regulations.

⚠ Warning
Risk of electric shock/fire/ material damage/damage to the appliance!
If the appliance's mains cable is altered or damaged, this may result in electric shock, short circuiting or fire due to overheating.
The mains cable must not be kinked, crushed or altered, and must not come into contact with any heat sources.

⚠ Warning
Risk of fire/material damage/ damage to the appliance!
The use of extension cords or power strips may result in fire due to overheating or short circuiting.
Connect the appliance directly to an earthed socket that has been correctly installed. Do not use extension cords, power strips or multi-way couplers.

⚠ Warning
Risk of injury/material damage/damage to the appliance!
- The appliance may vibrate or move when in operation, potentially resulting in injury or material damage.
  Place the appliance on a clean, even, solid surface and, using a spirit level to guide you, level it with the screw-in feet.
- If you take hold of any of the appliance's protruding parts (e.g. the appliance door) in order to lift or move it, these parts may break off and cause injury.
  Do not take hold of any of the appliance's protruding parts in order to move the appliance.

⚠ Warning
Risk of injury!
- The appliance is very heavy. Lifting it may result in injury. Do not lift the appliance on your own.
- The appliance has sharp edges on which you could cut your hands.
  Do not take hold of the appliance by its sharp edges. Wear protective gloves to lift it.
- If the hoses and mains cables are not correctly routed, they may constitute a tripping hazard, which may result in injury.
  Route hoses and cables such that they do not constitute a tripping hazard.

Caution!

Material damage/damage to the appliance

- If the water pressure is too high or too low, the appliance may not be able to operate properly, and it may also result in material damage or damage to the appliance.
  Make sure that the water pressure in the water supply facility is at least
  100 kPa (1 bar), and does not exceed
  1000 kPa (10 bar).
- If the water hoses are altered or damaged, this may result in material damage or damage to the appliance.
  The water hoses must not be kinked, crushed, altered or severed.
- The use of hoses supplied by other brands to connect to the water supply may result in material damage or damage to the appliance.
  Use the hoses supplied with the appliance or genuine spare part hoses only.
- The appliance is secured for transportation by transport locking devices. If the transport locking devices are not removed before the appliance is operated, this may result in damage to the appliance.
  It is important to completely remove all transport locking devices before using the appliance for the first time.
  Make sure that you retain these transport locking devices separately. It is important to refit the transport locking devices if the appliance is to be transported, in order to prevent the appliance from being damaged in transit.

Operation

⚠ Warning
Risk of explosions/fire!
Laundry that has been pretreated with cleaning agents that contain solvents, e.g. stain remover/cleaning solvent, may cause an explosion in the drum. Rinse the laundry thoroughly with water before washing it in the machine.

⚠ Warning
Risk of poisoning!
Poisonous fumes may be given off by cleaning agents that contain solvents, e.g. cleaning solvent.
Do not use cleaning agents that contain solvents.

⚠ Warning
Risk of injury!
- If you support your weight/sit on the appliance door when it is open, the appliance may tip over, which may result in injury.
  Do not support your weight on the appliance door when it is open.
- If you climb onto the appliance, the worktop may break, which may result in injury.
  Do not climb onto the appliance.
- If you reach into the drum while it is still rotating, you risk injuring your hands. Wait until the drum has stopped rotating.

⚠ Warning
Risk of scalding!
When washing at high temperatures, there is a risk of scalding if you come into contact with hot detergent solution (e.g. when draining hot detergent solution into a washbasin).
Do not reach into the hot detergent solution.

⚠ Warning
Eye/skin irritation!
Detergent and care products may spray out if the detergent drawer is opened while the appliance is in operation. Rinse eyes/skin thoroughly if they/it come(s) into contact with detergents or care products. If accidentally swallowed, seek medical advice.

Caution!

Material damage/damage to the appliance

- If the amount of laundry in the appliance exceeds its maximum load capacity, it may not be able to operate properly, or this may result in material damage or damage to the appliance.
  Do not exceed the maximum load capacity of dry laundry. Make sure you comply with the maximum load capacities specified for each of the programs.
- If you pour the wrong quantity of detergent or cleaning agent into the appliance, this may result in material damage or damage to the appliance.
  Use detergents/care products/cleaning agents and softeners in accordance with the manufacturers' instructions.

Cleaning/Maintenance

⚠ Warning
Risk of death!
The appliance is powered by electricity. There is a risk of electric shock if you come into contact with live components. Therefore please note:

- Switch off the appliance. Disconnect the appliance from the power supply (pull out the plug).
- Never take hold of the mains plug with wet hands.
- When removing the mains plug from the socket, always take hold of the plug itself and never the mains cable, otherwise this may damage the mains cable.
- Do not make any technical modifications to the appliance or its features.
- Repairs and any other work on the appliance must only be conducted by our customer service or by an electrician. The same applies for replacing the mains cable (when necessary).
- Spare mains cables can be ordered from our customer service.

⚠ Warning
Risk of poisoning!
Poisonous fumes may be given off by cleaning agents that contain solvents, e.g. cleaning solvent.
Do not use cleaning agents that contain solvents.

⚠ Warning
Risk of electric shock/material damage/damage to the appliance!
If moisture penetrates the appliance, this may cause it to short circuit.
Do not use a pressure washer or steam cleaner to clean your appliance.

⚠ Warning
Risk of injury/material damage/damage to the appliance!
The use of spare parts and accessories supplied by other brands is dangerous and may result in injury, material damage or damage to the appliance. For safety reasons, use genuine spare parts and accessories only.

Caution!
Material damage/damage to the appliance
Cleaning agents and agents for pretreating laundry (e.g. stain removers, prewash sprays, etc.) may cause damage if they come into contact with the surfaces of the appliance. Therefore please note:

- Do not allow these agents to come into contact with the surfaces of the appliance.
- Clean the appliance with nothing but water and a soft, damp cloth.
- Remove any detergent, spray or other residues immediately.

Environmental protection

Packaging/used appliance

Dispose of packaging in an environmentally-responsible manner.
This appliance is labelled in accordance with European Directive 2012/19/EU concerning used electrical and electronic appliances (waste electrical and electronic equipment - WEEE).
The guideline determines the framework for the return and recycling of used appliances as applicable throughout the EU.

Tips on economical use

- Always utilise the maximum amount of washing for the particular programme.
  Overview of programmes ⟶ Supplementary sheet for the operating and installation instructions.
- Wash normally soiled laundry without prewash.
- The selectable temperatures apply to the care labels on the textiles. The temperatures in the machine may deviate from this so that you get the optimum mix of energy-saving and washing results.
- **Energy-saving mode**: The control panel lighting and TimeLight* (display on the floor ⟶ *Page 39*) will go out after a few minutes. The start button will flash. Press any button to activate the lighting. Energy-saving mode will not be activated if a programme is running.
  *Depends on the model
- If the washing will be dried in a dryer, select the spin speed according to the dryer manufacturer's instructions.

Positioning and connecting

Included with the appliance

Note: Check:
- The machine for damage during transit. Never use a damaged machine.
- That all accessory parts are supplied.

If you have any complaints, contact the dealer from whom you purchased the appliance or our after-sales service.

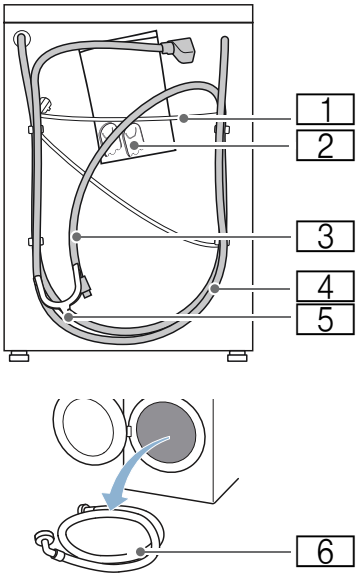

1 Mains cable
2 Bag:
- Installation and operating instructions
- After-sales service location directory*
- Guarantee*
- Cover caps for openings after the transport locks have been removed
- Hose clip for securing the water drain hose to the siphon

3 Water drain hose
4 Water supply hose on AquaStop models
5 Elbow for securing the water drain hose
6 Water supply hose on standard/ AquaSecure models
* Depends on the model

Components required for installation
→ *Page 22*

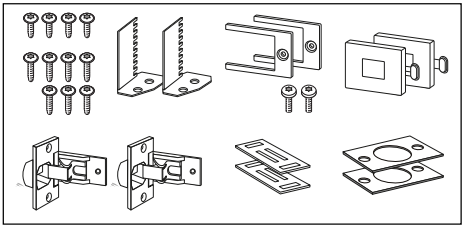

Useful tools
- Spirit level for aligning
- Spanner with:
  - WAF13 for undoing the transport locks and
  - WAF17 for aligning the appliance's feet

Safety instructions

Warning
Risk of injury!

- The washing machine is very heavy. Be careful when lifting/transporting the washing machine.
- When the washing machine is lifted by its protruding parts (e.g. the washing machine door), the components may break off and cause injuries.
  Do not lift the washing machine by protruding parts.
- If the hose and mains cables are not routed properly, there is a risk of tripping and injury.
  Lay hoses and cables in such a way that there is no risk of tripping.

Caution!
Damage to the appliance

Frozen hoses may rip/burst.
Do not install the washing machine in areas exposed to frost or outdoors.

Caution!
Water damage

The connection points for the water supply hose and water drain hose are under high water pressure. To prevent leaks and water damage, you must follow the instructions in this section.

Notes

- In addition to the safety information listed here, the local water and electricity supplier may have special requirements.
- If in doubt, have the appliance connected by a specialist.

Installation surface

Note: The washing machine be stable so that it does not move around.

- The installation surface must be firm and level.
- Soft floors/floor coverings are not suitable.

Installation on a slide sheet

Slide sheets make it easier to push the appliance into the installation space between cabinets.

You can order slide sheets from specialist retailers/our after-sales service using the spare part no. 66 1827.

Tip: Moisten the slide sheets with a mixture of water and washing-up liquid before pushing the appliance in. Do not use grease and/or oil to do this.

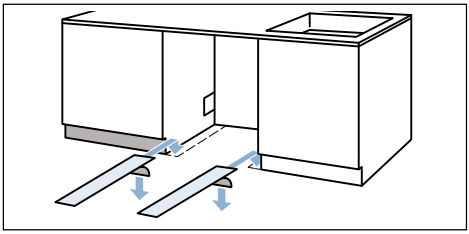

Installing the appliance below a high worktop

When installing the appliance below a high worktop, you can bridge the gap between the top of it and the worktop by placing the appliance on taller feet.

Order no.s for sets of taller feet:
WZ 20441, WMZ 20441, Z 7060X1

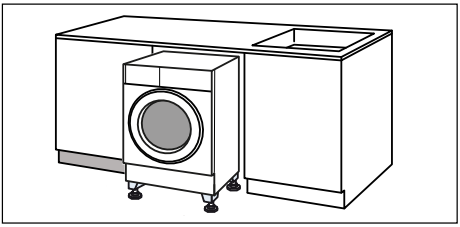

Installation on a base or a wooden joist floor

Caution!
Damage to the appliance

The washing machine may "wander" and tip/topple from the base when spinning.
The feet of the appliance must be secured with holding brackets.
Order no. WMZ 2200, WX 9756, Z 7080X0

Note: On wooden joist floors, install the washing machine:

- In a corner, if possible,
- On a water-resistant wooden board (min. 30 mm thick) which is screwed tightly to the floor.

Installation on a platform with drawer

Platform order no.: WMZ 20490, WZ 20490, WZ 20510, WZ 20520

Removing the transport locks

Caution!
Damage to the appliance

- The machine is secured for transportation using transport locks. If the transport locks are not removed, the drum, for example, may become damaged when the machine is operated.
  Before using the appliance for the first time, make sure that you completely remove all four transport locks. Keep the locks in a safe place.
- To prevent transport damage from occurring if the appliance is moved at a later date, you must refit the transport locks before transporting the appliance.

1. Take the hoses out of the holders.

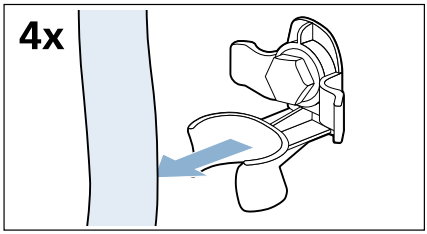

2. Use a WAF13 spanner to undo and remove all four transport lock bolts.

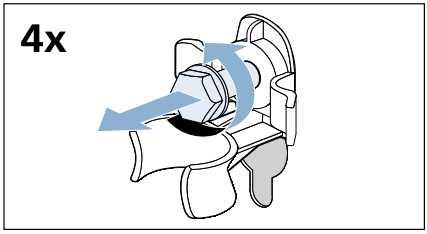

3. Remove the sleeves. Remove the mains cable from the holders.

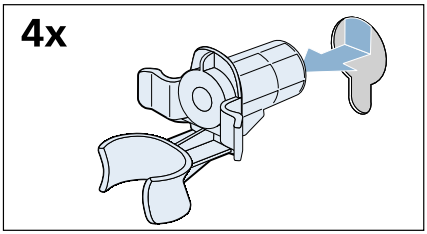

4. Put on the cover caps.

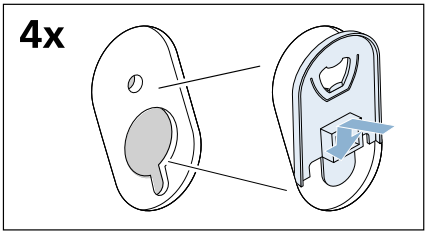

5. Press the cover cap down firmly at the top, while at the same time pushing it downwards until you hear the hooks clicking into place.

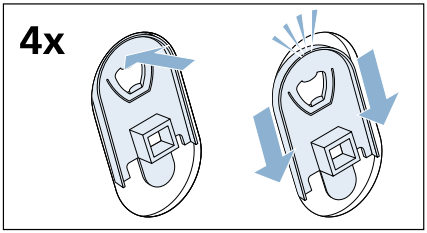

Retain the bolts and sleeves for future use. → *Page 28*

Hose and cable lengths

- Left-hand connection

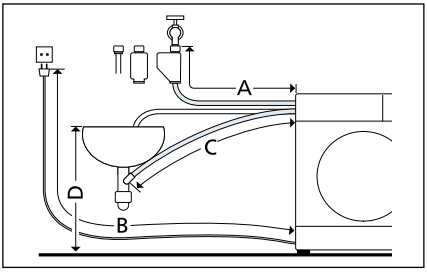

A 205 cm
B 150 cm
C 164 cm
D max. 100 cm

- Right-hand connection

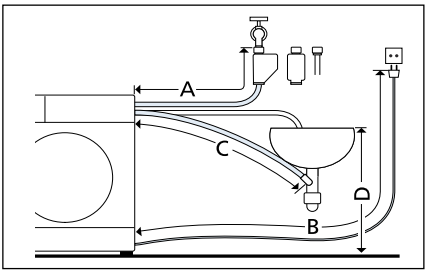

A 160 cm
B 195 cm
C 215 cm
D max. 100 cm

Tip: You can order an extension for the AquaStop supply hose or cold water supply hose (approx. 2.5 m) from specialist retailers/our after-sales service.
Order no. WMZ 2380, WZ 10130, CZ 11350, Z 7070X0

Water inlet

⚠ Warning
Risk of death!
There is a risk of electric shock if you touch live components.
Do not immerse the AquaStop safety valve in water (it contains an electric valve).

Notes

- Only operate the washing machine using cold mains water.
- Do not connect the machine to the mixer tap of an unpressurised hot water generator.
- Only use the supply hose provided or one that has been purchased from an authorised specialist retailer. Do not use a supply hose that has already been used.
- Do not kink or squeeze the water supply hose.
- Do not alter (shorten or cut through) the water supply hose (or else its strength can no longer be guaranteed).
- Only tighten the screw connections by hand. If the screw connections are over-tightened with a tool (such as pliers), this may damage the thread.

Optimum water pressure in the supply network

Minimum: 100 kPa (1 bar)

Maximum: 1000 kPa (10 bar)

When the tap is open, the water flow rate is at least 8 l/min.

If the water pressure is higher than this, a pressure-reducing valve must be installed.

Connection

Connect the water supply hose to the tap (26.4 mm = ¾") and to the appliance (not necessary on models with AquaStop as this is permanently installed):

- **to the tap**
  – Model: **Standard**

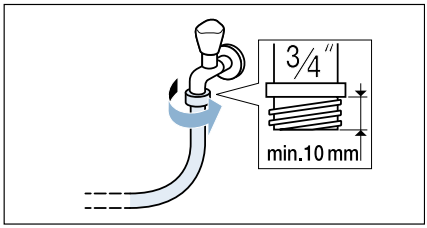

  – Model: **AquaSecure**

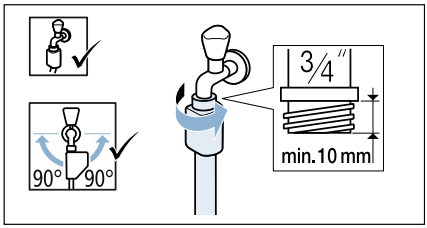

  – Model: **AquaStop**

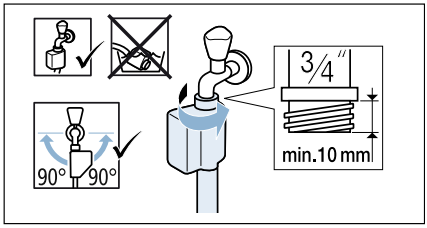

- **to the appliance**
  Model: Standard and AquaSecure

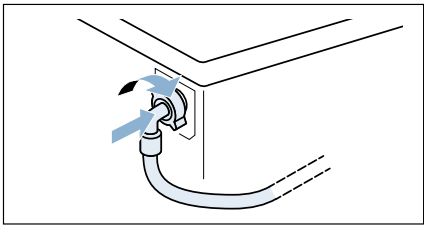

Note: Carefully turn on the tap and check that the connection points are not leaking. Screwed connections are under pressure from the water supply pipe.

Water outlet

Warning
Risk of scalding!
When you are washing at high temperatures, there is a risk of scalding if you come into contact with hot water (e.g. when draining hot water into a washbasin).
Do not reach into the hot water.

Caution!
Water damage
If the drain hose slips out of the washbasin or the connection point during draining due to high water pressure, any escaping water may cause water damage.
Secure the drain hose so that it cannot slip out.

Caution!
Damage to the appliance/fabrics
If the end of the drain hose is immersed in the drained water, water may be sucked back into the appliance and may damage the appliance/fabrics.
Make sure that:
- The plug does not block drainage from the washbasin.
- The end of the drain hose is not immersed in the drained water.
- The water drains away quickly enough.

Note: Do not kink the water drain hose or put strain on it lengthways.

Connection to a siphon

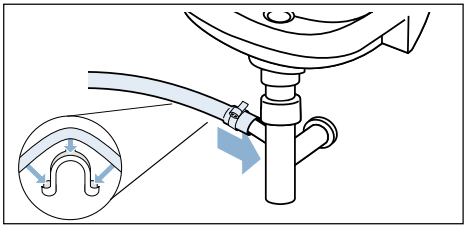

Height difference between the installation area and the drain
- for AquaSecure and standard models, min. 60 cm - max. 100 cm,
- for AquaStop models 0 - max. 100 cm.

Levelling

Incorrect alignment may result in loud noises, vibration and the machine "wandering".

All four of the appliance's feet must stand firmly on the ground. The appliance must not wobble.

Use a spirit level to check that the appliance is level and aligned correctly. If necessary, you can amend the alignment of the appliance by adjusting its feet.

The appliance must not touch the side panels of the cabinets it is between.

The lock nuts on the appliance's front feet must be firmly tightened against the housing using a WAF17 spanner.

Electrical connection

⚠ Warning
Danger of death!
There is a risk of electric shock if you touch live components.
- Never touch or hold the mains plug with wet hands.
- Only pull out the mains cable by the plug and never by the cable, as this could damage it.
- Never unplug the mains plug during operation.

Observe the following information and ensure that:

Notes
- The mains voltage and voltage indicated on the washing machine (rating plate) are the same.
  The connected load and fuse required are specified on the rating plate.
- The washing machine is only connected to an alternating current supply via a properly installed earthed socket.
- The mains plug fits the socket.
- The cable cross-section is adequate.
- The earthing system is properly installed.
- The mains cable is only replaced by a qualified electrician (if this is necessary). Replacement mains cables are available from customer services.
- No multiple plugs/couplings or extension cables are used.
- If an earth-leakage circuit breaker is used, only a type which displays the symbol is used.
  Only this symbol guarantees compliance with the currently applicable regulations.
- The mains plug can be accessed at all times.
- The mains cable is not kinked, squashed, altered or cut through.
- The mains cable does not come into contact with heat sources.

Installing the appliance

1. To make it easier to push in the appliance's rear feet (a), turn them in until the appliance is on the runners (b).

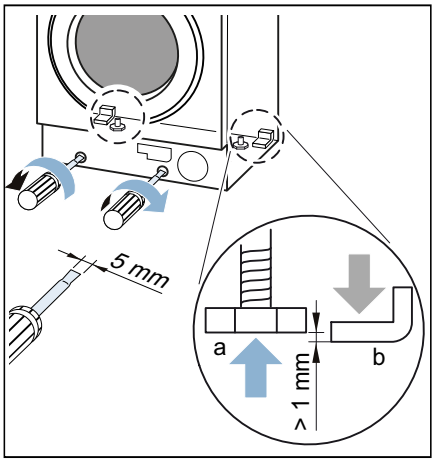

2. Prepare the installation space.

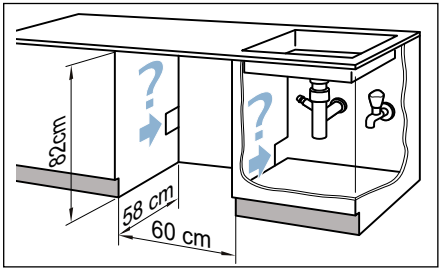

3. Lay the mains cable and the hoses. Push the appliance in, moving the mains cable and the hoses with it.
   Note: Take care not to trap the mains cable and the hoses between the back of the appliance and the wall.

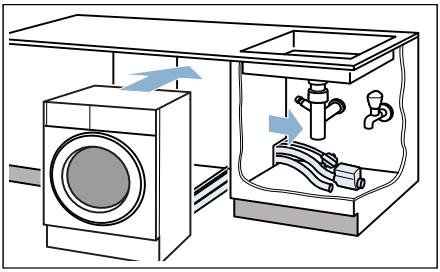

4. Connect the hoses. → *Page 19*, → *Page 20*

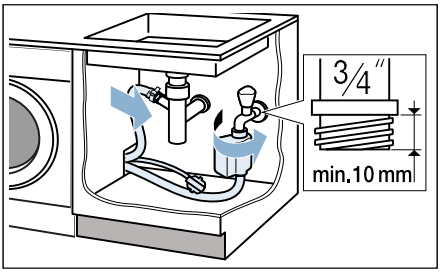

5. The appliance must be standing on all four feet before it can be put into operation. Unscrew the rear feet.

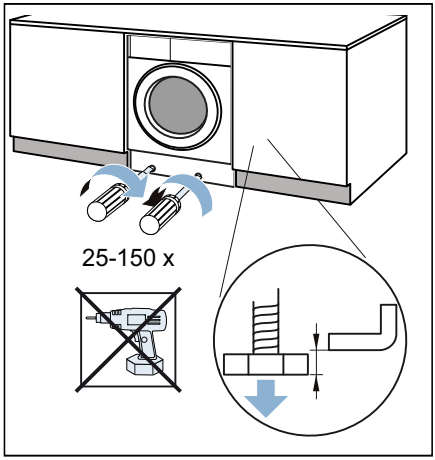

6. Align appliance with a spirit level.
→ *Page 20*

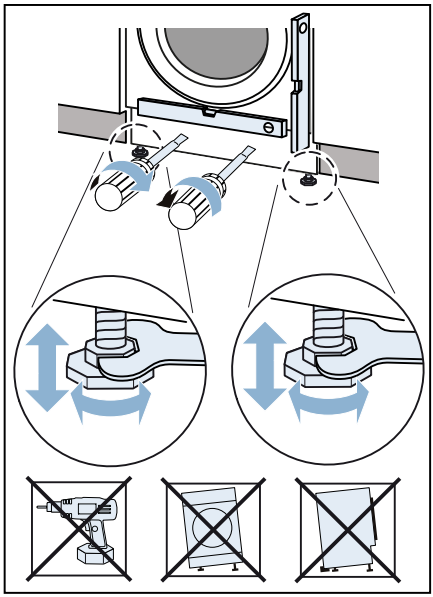

7. Hold the cabinet door against the appliance at the required height and mark where the top edge of the appliance comes to on the inside of the door.
   – Left hinged

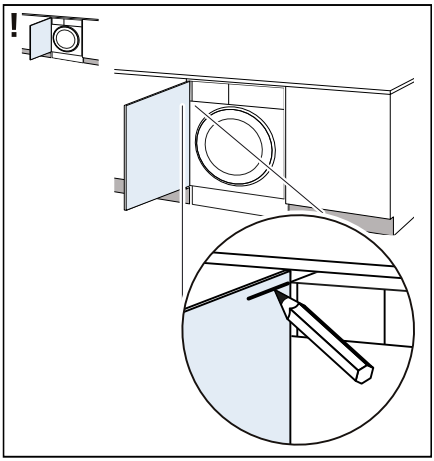

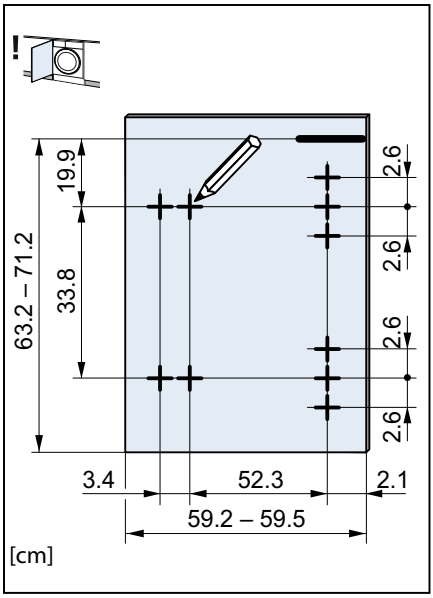

   – Right hinged

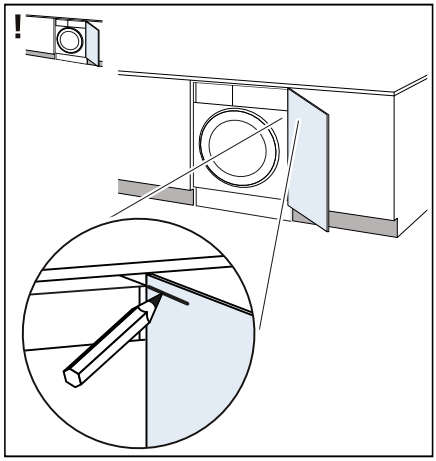

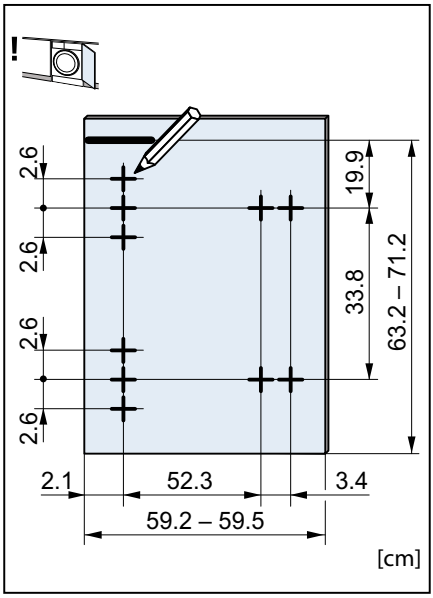

8. Drill the holes. Use a Forstner bit for the 35 mm hole.

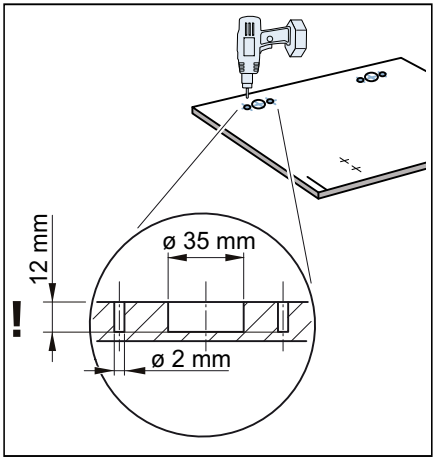

9. Put the hinges in the holes and screw them in. Screw in the counter plates for the magnetic catches.

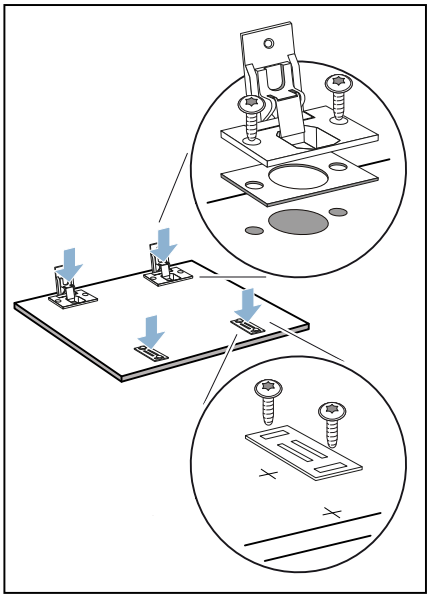

10. Put the hinges in the appliance (1 + 2), push on the cover panels (3) and screw them in place (4).

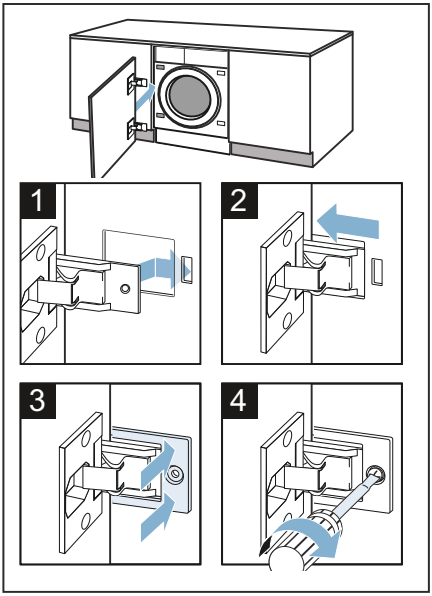

11. Put the magnetic catches on the appliance.

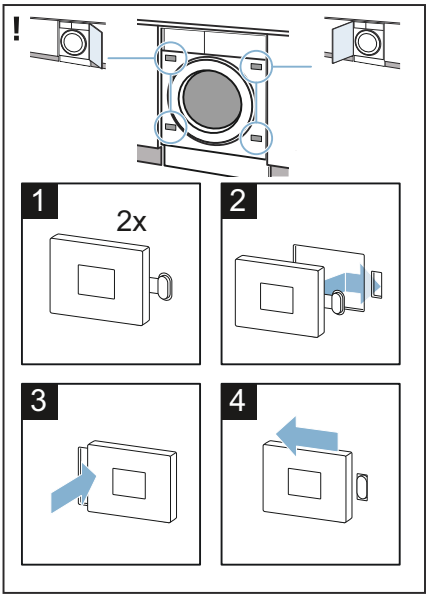

12. Align the door of the cabinet.

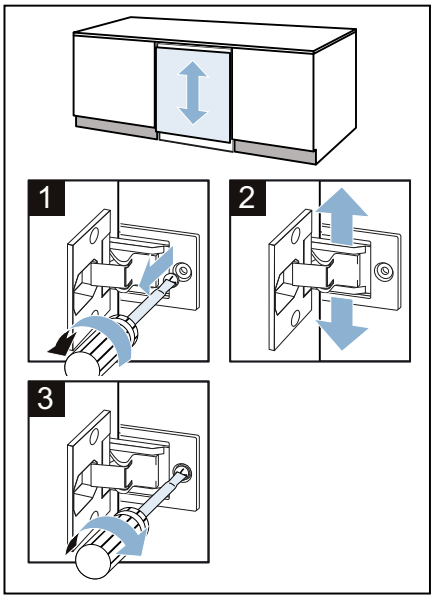

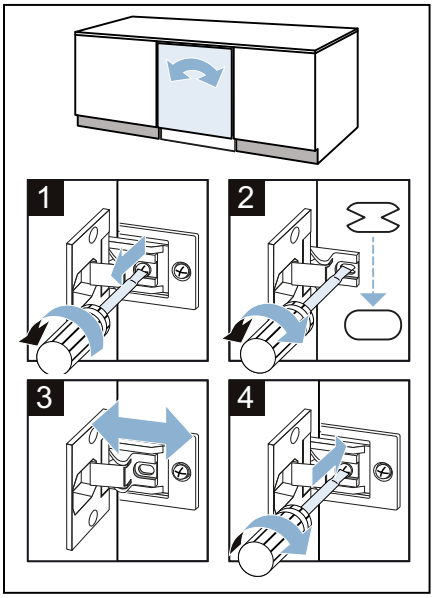

13. Put in the spacers for the toe kick.

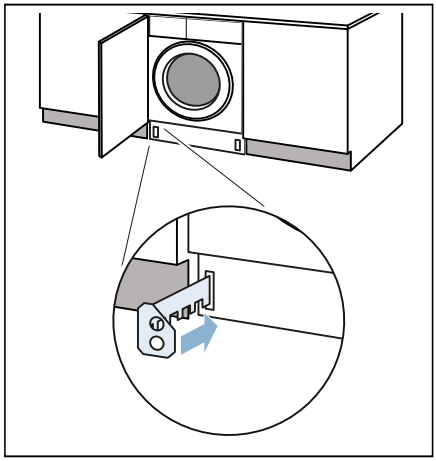

14. Reduce dimension Y.

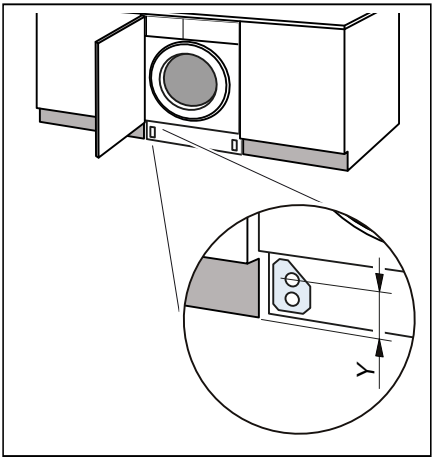

15. Screw the spacers in as per the dimensions.

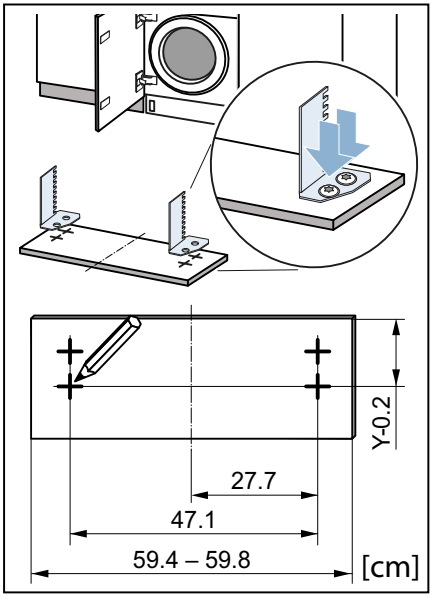

16. Fit the toe kick.

Note: If the toe kick is pulled forwards or if the appliance is installed at eye-level flush with the front of the cabinet, TimeLight* (display on the floor) will not be visible.
*Depends on the model

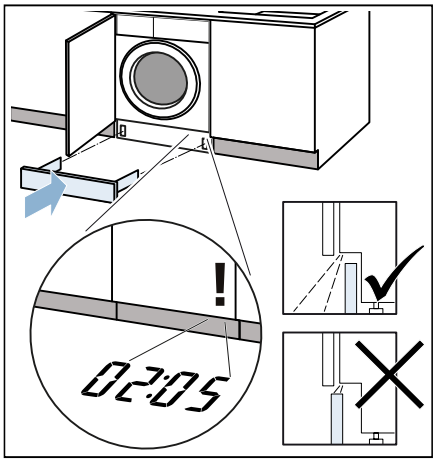

17. Plug the plug in the socket.

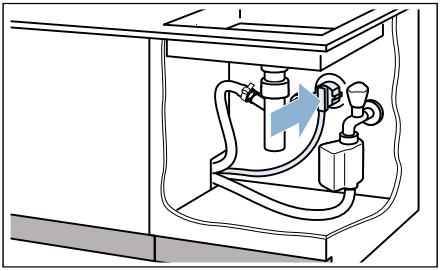

Your appliance is now installed and ready to use.

Before washing for the first time

The washing machine was thoroughly tested before leaving the factory. To remove any water that may be left over from testing, run the first wash cycle **without** any laundry.

Note: The washing machine **must be correctly installed** and **connected**. See → *Page 14* onwards

Preparatory work:
1. Plug the mains plug into the mains.
2. Turn on the tap.

Run a programme without laundry:
1. Switch on the appliance.
2. Close the door (do not load any laundry).
3. Set the **Cottons 90 °C** programme.
4. Open the detergent drawer.
5. Pour approximately 1 litre of water into compartment **II**.
6. Pour standard washing powder into compartment **II**.
   Note: To prevent foaming, only use half the amount of detergent recommended by the detergent manufacturer.To prevent foaming, only use half the amount of detergent recommended by the detergent manufacturer. Do not use detergent designed for woollens or delicates.
7. Close the detergent drawer.
8. Press the ▷II button.
9. Switch off the appliance at the end of the programme.

Your washing machine is now ready to use.

Transportation

E.g. when moving house

Preparatory work:

1. Turn off the tap.
2. Reduce the water pressure in the supply hose: ⟶ *Page 48*; Cleaning and maintenance – filter in the water supply blocked
3. Disconnect the washing machine from the mains.
4. Drain the remaining water: ⟶ *Page 46*; cleaning and maintenance – the drain pump is blocked, emergency draining
5. Remove the hoses.

Attach the transport locks:

1. Use a screwdriver to remove the covers and then keep them in a safe place.

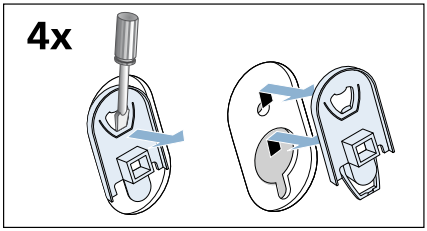

2. Insert all four sleeves.
   The mains cable can be clamped to the holders.

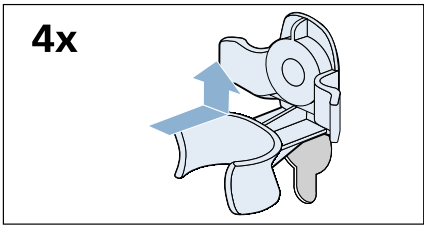

3. Insert the transport lock bolts and tighten them with a WAF13 spanner.

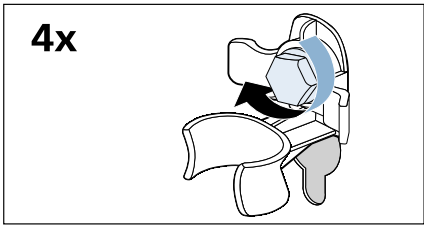

Before switching on the appliance again:

Notes

- The transport braces **must** be removed.
- Pour approx. 1 litre of water into compartment **II**, select the **Drain/Empty** programme and start. This will prevent detergent from flowing unused into the drain during the next wash.

Getting to know the appliance

Washing machine

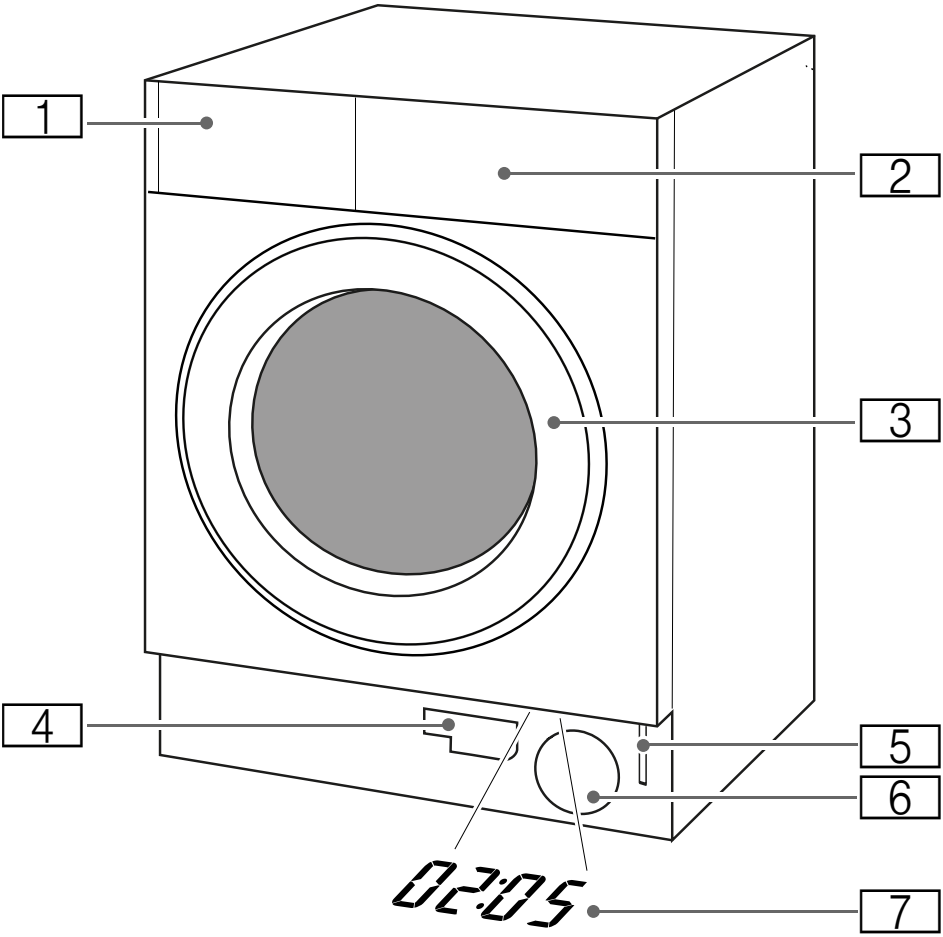

1 Detergent drawer
2 Control/display panel
3 Door with door handle
4 Drain hose
5 Emergency release
6 Drain pump
7 TimeLight

TimeLight (depends on the model)

When the appliance is switched on, information about the programme will be displayed on the floor underneath the door of the cabinet.
You can switch this display on or off.
→ *Page 43*

Control panel

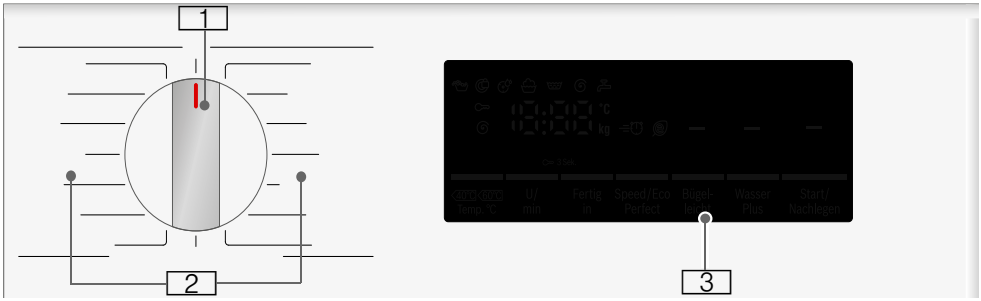

1 **Programme selector**:
for selecting a programme and switching the machine on/off via the **Off** position;

2 **Programmes**
You can find an overview of all programmes on the printed supplement for the installation and operating instructions.

3 **Display panel** for settings and information

Display panel

The display panel provides you with information on the programme you have selected and the possible settings for that programme.

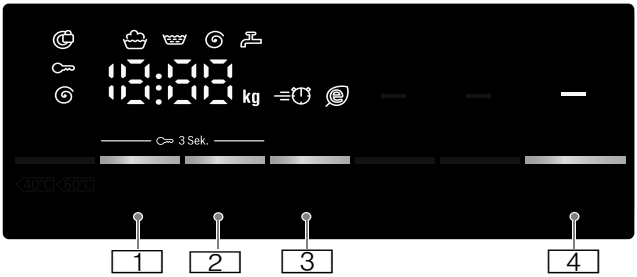

Buttons	Indicators and symbols for setting values	Setting
1	0 - 1400*, - --	Spin speed; 0 = no spin, - -- = Rinse Stop
2	1 - 24 h	Ready in
3		Speed/Eco
4		for starting, pausing (e.g. to add laundry) and cancelling a programme
1 + 2	3 sec.	Childlock / control panel lock

* Maximum spin speed depends on the model

Other indicators and symbols	Information on:
End - --	Programme status: wash, rinse, spin, end of programme Programme end with Rinse Stop selected
	Door locked
	Tap off / water pressure too low
88:88	Length of programme, e.g. 1:51; "Ready in" time, e.g. 8.5 h; recommended load, e.g. 8.0 kg*; programme status, e.g. End

* Symbols depend on the model

Laundry

Prepare the laundry

Caution!
Damage to the appliance/laundry
Foreign objects (e.g. coins, paperclips, needles, nails) may damage the laundry or components of the washing machine.

You should therefore do the following when preparing your laundry:

- Empty any pockets.

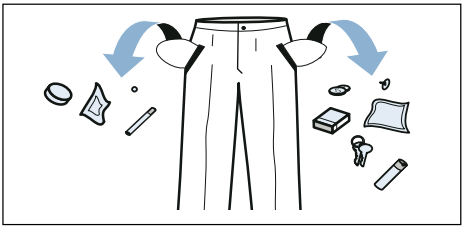

- Look out for metal objects (paperclips, etc.) and remove them.
- Wash delicates in a laundry bag (tights, underwired bras, etc.).
- Close any zips; button up any cover buttons.
- Brush sand out of pockets and collars.
- Remove curtain fittings or place curtains in a laundry bag.

Sorting laundry

Sort your laundry according to the care instructions and manufacturer's information on the care labels, depending on:

- Type of fabric/fibre
- Colour
  Note: Laundry can discolour or not be cleaned correctly. Wash white and coloured items separately. Wash new coloured items separately the first time you wash them.
- Soiling
  Wash laundry with the same level of soiling together.
  Some examples of soiling levels can be found on → *Page 34*.
  - **Light**: Do not prewash, select the **Speed** setting if necessary
  - **Normal**
  - **Heavy**: Load less laundry, select a program with prewash
  - **Stains**: Remove/pretreat stains while they are fresh. Firstly, dab with soapy water; do not rub.Then wash the items of laundry with the appropriate program. Stubborn or dried-in stains can sometimes only be removed by washing several times.
- Symbols on the care labels
  Note: The numbers in the symbols indicate the maximum washing temperature that may be used.

	Suitable for normal washing process; e.g. Cottons program
	A gentle washing process is required; e.g. Easy-Care program
	An especially gentle washing process is required; e.g. Delicate/Silk program
	Suitable for washing by hand; e.g. Wool program
	Do not machine wash.

Starching

Note: Laundry should not be treated with fabric softener.

Liquid starch can be used to stiffen fabrics particularly in the Rinse and Cottons programmes. Measure starch into compartment ❀ in accordance with the manufacturer's instructions (clean first if necessary).

Dyeing/bleaching

Dye should only be used in normal household quantities. Salt may damage stainless steel. Always follow the dye manufacturer's instructions.

Do **not** use the washing machine to bleach clothes.

Soaking

1. Pour soaking agent/detergent into compartment **II** in accordance with the manufacturer's instructions.
2. Select the desired programme.
3. Press the ▷II button to start the programme.
4. After approx. ten minutes, press the ▷II button to pause the programme.
5. After the desired soaking time, press the ▷II button again to continue or change the programme.

Notes

- Load laundry of the same colour.
- No additional detergent is required; the soaking solution is used for washing.

Detergent

Correct selection of detergent

The care label is crucial for selecting the correct detergent, temperature and treatment of the laundry. ⟶ See also www.sartex.ch

If you visit www.cleanright.eu, you will find further information on detergents, care products and cleaning agents for domestic use.

- **Standard detergent with optical brighteners**
  Suitable for boil-washable white laundry made from linen or cotton
  Programme: Cottons/
  cold - max. 90 °C
- **Detergent for colours without bleach or optical brighteners**
  Suitable for coloured laundry made from linen or cotton
  Programme: Cottons/
  cold - max. 60 °C
- **Detergent for colours/delicates without optical brighteners**
  Suitable for coloured laundry made from easy-care fibres, synthetic fibres
  Programme: Easy-Care/
  cold - max. 60 °C
- **Detergent for delicates**
  Suitable for delicate, fine fabrics, silk or viscose
  Programme: Delicate/Silk/
  cold - max. 40 °C
- **Detergent for woollens**
  Suitable for wool
  Wool programme/
  cold - max. 40 °C

Saving energy and detergent

For light and normal soiling, you can save energy (lower washing temperature) and detergent.

Saving	Soiling/note
Reduced temperature and detergent quantity as per the recommended dosage	**Light** No visible dirt or stains. Clothing has taken on some body odour, e.g.: ■ Light summer/sports clothing (worn for a few hours) ■ T-shirts, shirts, blouses (worn for up to one day) ■ Guest bed linen and hand towels (used for one day)
	Normal Visible dirt or a few light stains, e.g.: ■ T-shirts, shirts, blouses (sweat soaked, worn a few times) ■ Towels, bedding (used for up to one week)
Temperature as per the care label and detergent quantity as per the recommended dosage for heavy soiling	**Heavy** Dirt and/or stains clearly visible, e.g. tea towels, baby items, work clothing

Note: When measuring the amount of all detergents/additives/care products and cleaning agents, please always check the manufacturer's instructions and information. ⟶ *Page 38*

P+ Programme default settings

The default program settings are displayed in the display panel after selecting the program.

You can change the default settings.

To do this, repeatedly press the corresponding button until the required setting is displayed on the display panel.

Note: Pressing and holding the buttons automatically runs through the setting values until the last one. Then press the button again and you will be able to change the setting values again.

You can find an overview of all possible program settings on the supplementary sheet for the installation and operating instructions.

Spin speed

(, rpm , Spin speed)

Depending on what stage the program is in, you can change the spin speed (in rpm; revolutions per minute) before and during the program.

Setting 0: The rinsing water is drained but there is no final spin. The laundry stays wet inside the drum, e.g. for items that should not be spun.

Setting - - -: Rinse Stop = no final spin. The laundry stays in the water after the final rinse.

You can select "Rinse Stop" to prevent creasing if the laundry will not be taken out of the washing machine immediately after the program has ended.

To continue/end the program
→ *Page 40*

The maximum speed that can be set depends on the model and program that has been selected.

Ready in

(, Finished in, Finish in, Ready in)

Before starting the program, you can preselect the program end ("Finish in" time) in hourly increments (h = hour) up to a maximum of 24 hours.

To do this:
1. Select a program.
   The program duration is displayed for the selected program, e.g. **2:30** (hours:minutes).
2. Press the **Ready in** button repeatedly until the required number of hours is displayed.
3. Press the button.
   The program starts.
   The selected number of hours (e.g. **8 h**) is shown in the display panel and counts down until the wash program starts. The duration of the program is then displayed.

Note: The length of the program is automatically adjusted when the program is running.
Certain factors can affect the program length, e.g.:
- Program settings,
- Detergent dosage (additional rinse cycles if required due to foaming),
- Load size/type of textiles (water absorption differs),
- Imbalances (e. g. due to fitted sheets) are offset with several start-ups of spin cycles,
- Fluctuations in power supply,
- Water pressure (infeeding speed).

Following the start of the program , you can change the preselected number of hours as follows:
1. Press the button.
2. Use the **Ready in** button to change the number of hours.
3. Press the button.

Following the start of the program you can add or remove laundry as required.
→ *Page 40*

Additional programme settings

You can find an overview of all possible additional settings on the supplementary sheet for the installation and operating instructions.

The settings vary depending on the model.

Speed/Eco

(=⏱ ◎, Speed Eco Perfect)

Button with two possible settings for adapting the selected program:

- **Speed**
  Washing in a shorter time while achieving a washing result that is consistent with, but uses more energy than, the selected program, without the Speed/Eco setting.
  Note: Do not exceed the maximum load.
- **Eco**
  Energy-optimised washing by reducing the temperature while achieving a washing result that is consistent with the selected program, without the Speed/Eco setting.

Press the button to do this. First of all, you can select the **Speed** setting. If you press the button again, the **Eco** setting is active. The respective symbol is shown in the display when the setting is activated.

If you press the button again, no setting is active.

Operating the appliance

Preparing the washing machine

Note: The washing machine **must be correctly installed** and **connected**. From ⟶ *Page 14*.

1. Connect the mains plug.
2. Turn on the tap.
3. Open the door.
4. Check that the drum is completely drained. Drain if necessary.

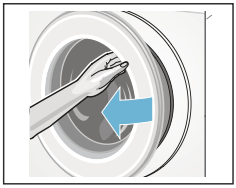

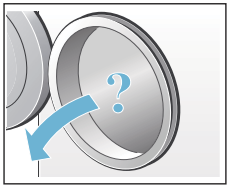

Select programme/switch on the appliance

Note: If you have activated the childproof lock, you will need to deactivate it before you can select a programme.

Use the programme selector to select the programme you require. You can turn the selector in either direction.

The appliance is switched on.

The display panel and TimeLight* (if the display on the floor has been activated and is visible) will show information about the programme you have selected while the door is open.

*Depends on the model

Drum light: The drum is lit after switching on the appliance, after opening and closing the door and after starting a programme. The light switches off automatically.

Change the programme default settings

You can use the default settings for each wash cycle or change them.

To do this, repeatedly press the corresponding button until the required setting is displayed.

The settings are activated without needing to be confirmed.

The settings are not saved after switching off the washing machine.

Default program settings⟶ *Page 35*

Select additional programme settings

By selecting additional settings, you can better adapt the washing process to your items of laundry.

The settings can be selected or deselected depending on the program progress.

The button indicator lamps light up if a setting is activated.

The settings are not saved after switching off the washing machine.

Additional program settings
⟶ *Page 36*

Placing laundry into the drum

⚠ Warning
Danger of death!
Items of laundry pretreated with cleaning agents that contain solvents, e.g. stain remover/cleaning solvent, may cause an explosion after being loaded into the washing machine. Hand-rinse these items of laundry thoroughly beforehand.

Notes

- Mix items of laundry of varying sizes.Laundry items of different sizes distribute themselves better during the spin cycle.Individual laundry items may cause an unbalanced load.
- Observe the maximum specified load. Overfilling adversely affects the washing result and promotes creasing.

1. Unfold presorted laundry items and place them in the drum.
2. Make sure that no items of laundry are trapped between the door and the rubber seal, and close the door.

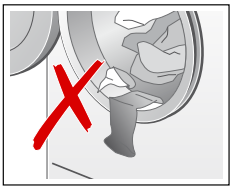

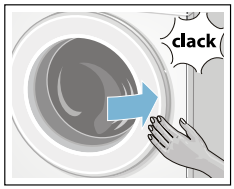

Measure and add detergent and care products

Caution!
Damage to the appliance
Cleaning agents and agents for pretreating laundry (e.g. stain removers, prewash sprays, etc.) may cause damage if they come into contact with the surfaces of the washing machine. Do not allow these agents to come into contact with the surfaces of the washing machine. If necessary, immediately wipe away spray residue and other residues/droplets with a damp cloth.

Dosing

Dose the detergents and care products according to:

- Water hardness (ask your water supply company)
- The manufacturer's instructions on the packaging
- The amount of laundry
- Soiling ⟶ *Page 34*

Filling

⚠ Warning
Eye/skin irritation!
Detergent and care products may spray out if the detergent drawer is opened while the machine is in operation.
Open the drawer carefully.
Rinse eyes/skin thoroughly if they come into contact with detergents or care products.
If swallowed accidentally, seek medical advice.

Note: Dilute viscous fabric softener and fabric conditioner with water to prevent blockages.

Pour the detergent and care products into the appropriate compartments:

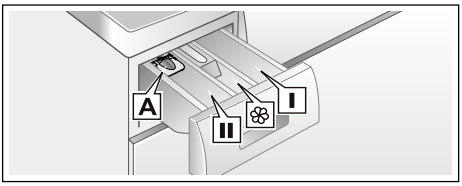

Measuring aid **A**	for liquid detergent
Dispenser **II**	Detergent for the main wash, water softener, bleach, stain remover
Dispenser ❀	Softener, starch, do not exceed **max.**
Dispenser **I**	Detergent for prewash

1. Pull out the detergent drawer as far as possible.
2. Add detergent and/or care products.
3. Close the detergent drawer.

Measuring aid* for liquid detergent

Position the measuring aid for dosing the correct amount of liquid detergent:
1. Pull out the detergent drawer.Press down the insert and fully remove the drawer.
2. Slide the measuring aid forwards, fold it down and click it into place.
3. Reinsert the drawer.

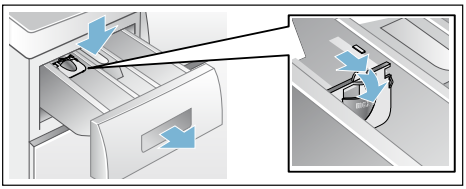

Note: Do not use the measuring aid for gel detergents and washing powder, or for programs with prewash or when the "Fertig in" (Ready in) time is selected.

Start the programme

Press the ▷II button. The indicator lamp will light up and the programme will start.

The display panel and TimeLight* will show the "Ready in" time while the programme is running, or the programme length plus the programme progress symbols once the wash cycle has started.
Display panel ⟶ *Page 31*
TimeLight* ⟶ *Page 29*

*Depends on the model

If you want to lock the programme to prevent it from being adjusted inadvertently, you can select the childproof lock as follows.

Childlock

(⚷ 3 sec.)

You can lock the washing machine to prevent the functions you have set from being changed inadvertently. To do this, activate the childproof lock when the program has started.

To **activate**/**deactivate**, press and hold the **Spin speed** and **Ready in** buttons at the same time for approx. three seconds.The ⚷ symbol appears in the display panel.

- ⚷ lights up: The childproof lock is active.
- ⚷ flashes: The childproof lock is active and the program selector has been adjusted.To deactivate the childproof lock, reset the program selector to the initial program. The symbol lights up again.
  Note: To avoid the program to terminate, do not turn the program selector beyond the Off position.

Note: The childproof lock remains active after the program has ended and the appliance is switched off. You must always deactivate the childproof lock if you want to start a new program.

Adding laundry

Following the start of the program, you can add or remove laundry as required.

Press the ▷II button to do this.

The ▷II button indicator lamp flashes and the machine checks whether it is possible to add laundry.

If the following appears in the display panel:

- the symbol disappears, and adding is possible.
- the symbol lights up, it is not possible to add laundry.

To continue the program, press the button ▷II.The program continues automatically.

Notes

- Do not leave the door open for too long when adding laundry as water from the laundry may leak out.
- For safety reasons, the door remains locked when the water level or temperature is high, or while the drum is turning, and it is not possible to add laundry during this time.
- The load display is not active during reloading.

Changing the programme

1. Press the ▷II button.
2. Select another program.
3. Press the ▷II button.The new program starts from the beginning.

Cancel the programme

For programs at high temperature:
1. Press the ▷II button.
2. To cool down laundry: Select **Rinse**.
3. Press the ▷II button.

For programs at low temperature:
1. Press the ▷II button.
2. Select **Spin**.
3. Press the ▷II button.

Programme end during rinse hold

- - - appears in the display panel and the indicator lamp of the ▷II button flashes.

Continue the program by:

- Pressing the ▷II button or
- Selecting a spin speed or setting the program selector to **Spin** and then pressing the ▷II button.

Programme end

End appears in the display panel and the indicator lamp of the ▷II button is off.

The end of the programme will also be displayed on the floor if:

Depends on the model

- TimeLight (visual display) has been activated and is visible.
- Energy-saving mode has not been activated. → *Page 13*

Removing laundry/switching off the appliance

1. Open the door and remove the laundry.
2. Turn the programme selector to **Off**. The appliance is now switched off.
3. Turn off the tap.
   Note: Not necessary on AquaStop models.

Notes

- Do not leave any items of laundry in the drum. They may shrink in the next wash or discolour another item.
- Remove any foreign objects from the drum and the rubber seal – risk of rusting.
- Wipe the rubber seal dry.

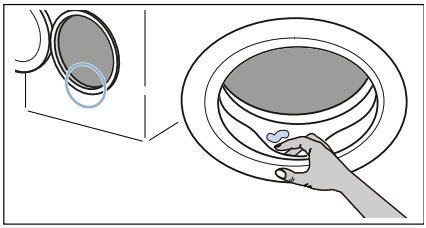

- Leave the door and detergent drawer open so that any residual water can evaporate.
- Always wait until the programme has ended, as the appliance could still be locked. Then switch the appliance on and wait for it to unlock.
- If the display panel goes off at the end of a programme, energy-saving mode has been activated. Press any button to activate the panel.

Sensors

Automatic load sensing

The automatic load sensing function adapts the water consumption ideally to each programme depending on the type of fabric and the load.

Unbalanced load detection system

The automatic unbalanced load detection system detects imbalances and ensures even distribution of the laundry by repeatedly starting and stopping drum spinning.

If the laundry is extremely unevenly distributed, the speed is reduced or the spin cycle is not performed for safety reasons.

Note: Place large and small items of laundry evenly in the drum. ⟶ *Page 51*

VoltCheck

depending on the model

The automatic voltage control system detects an unauthorised voltage under-usage. The colon on the Ready in display is flashing. ⟶ *Page 31*

Once the supply voltage is stable again, the colon of the Ready in display lights up (Normal mode).

The detected voltage under-usage is indicated in the further program sequence by all three points lighting up in the display.

Note: Voltage under-usages can for example result in program extensions and/or a non-satisfactory spin result.

Setting the signal

You can change the following settings:

- The volume of the notification signals (e.g. at the end of the programme).
- The volume of the button signals.
- Activating/deactivating TimeLight* (for displaying information about the programme on the floor).

*Depends on the model

You will need to activate setting mode before you can change these settings.

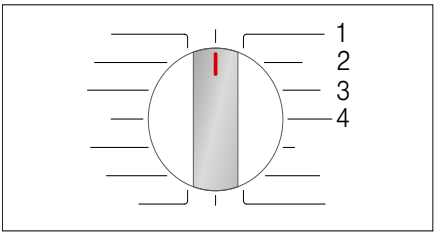

Activating setting mode

1. Set the programme selector to the **Cottons** programme at to position 1. The washing machine is switched on.
2. Press the ▷II button while turning the programme selector clockwise to position 2. Release the button.

Setting mode is activated and the preset volume for the notification signals (e.g. at the end of the programme) appears in the display panel.

Changing settings

You can change the following settings by pressing the **Ready in** button when the programme selector is at these positions:

- **2**: The volume of the notification signals
  and/or
- **3**: The volume of the button signals

0 = off,
1 = quiet,
2 = medium,
3 = loud,
4 = very loud

  and/or
- **5**: Whether TimeLight* (for displaying information about the programme on the floor) is switched on or off.

*Depends on the model

Exiting setting mode

You can now exit setting mode by turning the programme selector to the **Off** position. This will save the settings.

Cleaning and maintenance

Warning
Danger of death!
There is a risk of electric shock if you touch live components.
Switch off the appliance and pull out the mains plug.

Warning
Risk of poisoning!
Toxic vapours can be produced by cleaning agents that contain solvents, e.g. cleaning solvent.
Do not use cleaning agents that contain solvents.

Caution!
Damage to the appliance
Cleaning agents that contain solvents, e.g. cleaning solvent, can damage surfaces and components in the machine.
Do not use cleaning agents that contain solvents.

Prevent detergent residue from building up and odours from forming by following these instructions:

Notes
- Ensure the room in which the washing machine is set up is well ventilated.
- Leave the door and detergent dispenser tray open slightly when the washing machine is not in use.
- Occasionally run a wash using the **Cottons 60 °C** programme and powder detergent.

Machine housing/control panel

- Wipe the housing and the control panel with a soft, damp cloth.
- Remove the detergent residue immediately.
- Do not clean with a water jet.

Drum

Use chlorine-free cleaning products; do not use steel wool.

If there are odours in the washing machine or you want to clean the drum, run the **Cottons 90 °C** programme without laundry. Add washing powder.

Descaling

Descaling should not be necessary if the detergent is measured out correctly. However, if it is required, follow the manufacturer's instructions for the descaling agent. Suitable descalers can be obtained via our website or from customer services. → *Page 53*

Detergent drawer and housing

If the washing machine contains detergent or fabric softener residues:

1. Pull out the detergent drawer as far as possible.

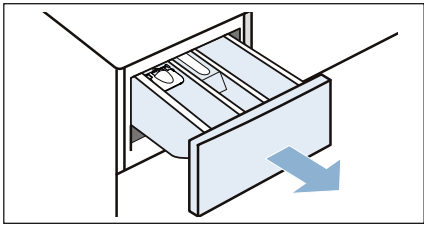

2. Press the insert down and fully remove the drawer.

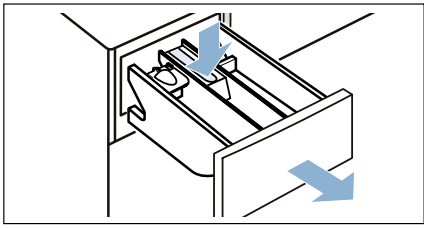

3. To remove the insert: Push the insert upwards from below with your finger.

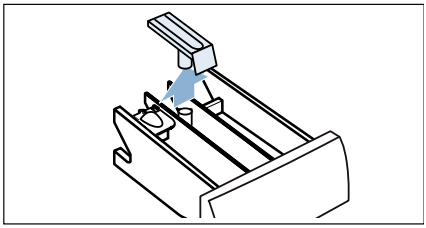

4. Clean the detergent drawer and insert with water and a brush, then dry them.

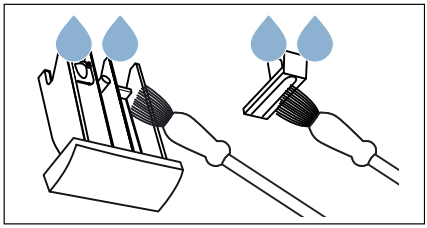

5. Fit the insert and lock it in place (push the cylinder onto the guide pin).

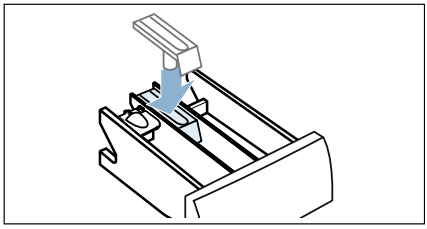

6. Clean the inside of the detergent drawer housing.

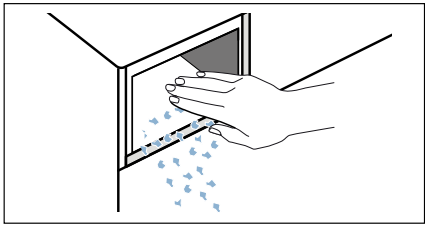

7. Push in the detergent drawer.

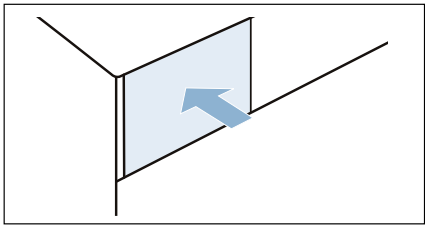

Note: Leave the detergent drawer open so that any residual water can evaporate.

The drain pump is blocked, emergency draining

Warning
Risk of scalding!
The washing water will get very hot when washing at high temperatures. You may be scalded if you touch the hot washing water.
Allow the washing water to cool down.

1. Turn off the tap so that no more water can flow in and it has to be drained via the drain pump.
2. Switch off the appliance. Pull out the mains plug.
3. Remove the toe kick.

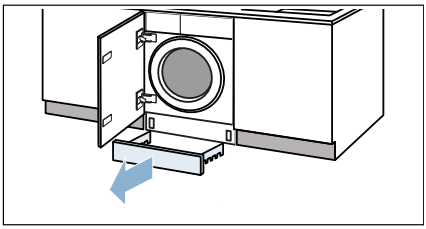

4. Take the drain hose out of the holder.

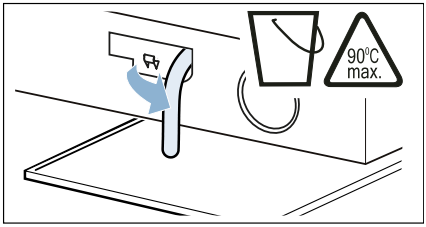

5. Remove the sealing cap and drain the water into a suitable container.

6. Put the sealing cap back on and press down firmly.

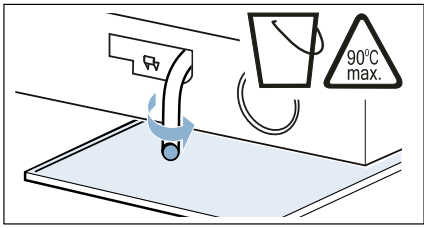

7. Place the drain hose back in the holder.

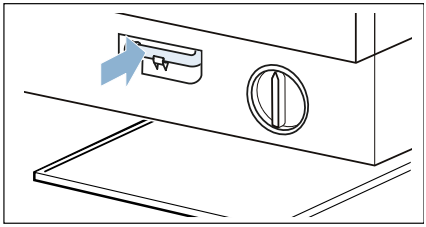

8. Carefully unscrew the pump cover. Be aware that any remaining water may leak out.

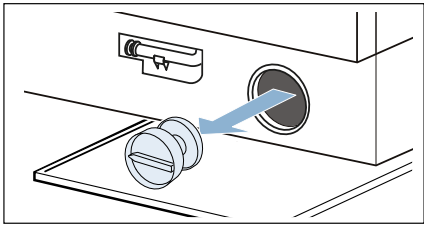

9. Clean the inside, the pump cover thread and the pump housing. The impeller in the drain pump must be able to rotate.

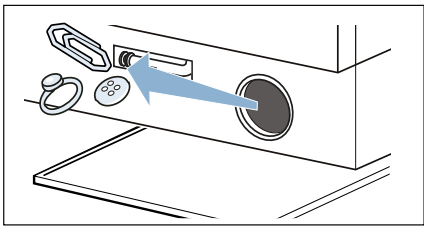

10. Put the pump cover back on and screw it in. The grip must be vertical.

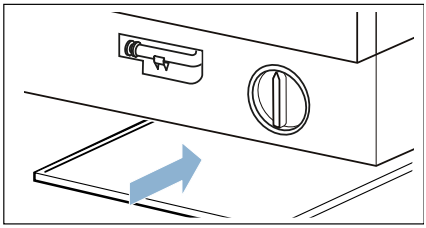

11. Refit the toe kick.

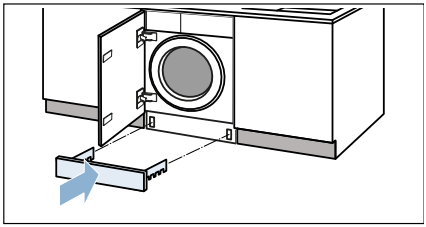

Note: To prevent unused detergent from flowing straight into the drain during the next wash: Pour 1 litre of water into compartment **II** and start the **Drain/Empty** programme.

The drain hose at the siphon is blocked

1. Switch off the appliance. Pull out the mains plug.
2. Undo the hose clamp. Carefully remove the drain hose. Be aware that any remaining water may leak out.
3. Clean the drain hose and siphon connecting piece.

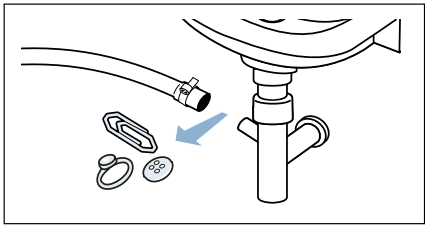

4. Re-attach the drain hose and secure the connection point using the hose clamp.

Filter in the water supply blocked

Relieve the water pressure in the supply hose first:

1. Turn off the tap.
2. Select any programme (except Rinse/Spin/Empty).
3. Start the programme.
4. Allow the programme to run for approximately 40 seconds, then switch off the appliance.
5. Pull out the mains plug.

Then clean the filter:

1. Disconnect the hose from the tap.

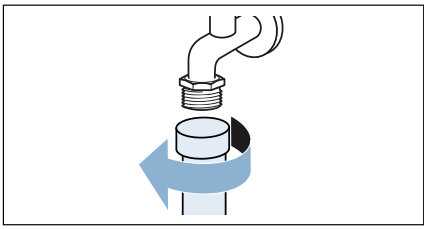

2. Clean the filter with a small brush.

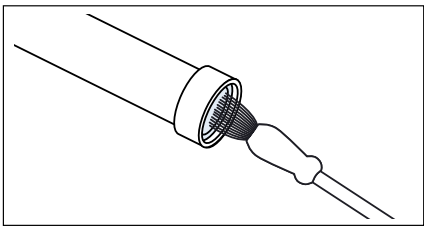

3. For standard and AquaSecure models, clean the filter on the rear of the appliance:
   Disconnect the hose from the rear of the appliance.

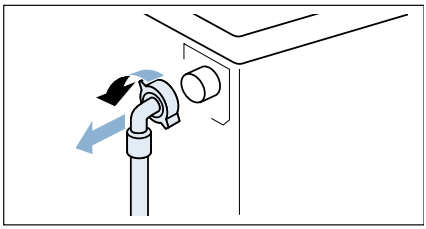

4. For standard and AquaSecure models, clean the filter on the rear of the appliance:
   a) Use pliers to remove the filter.

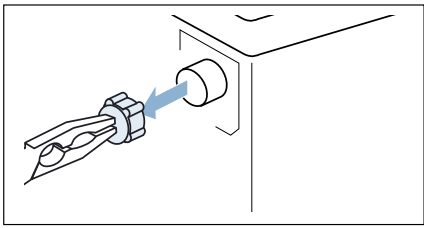

   b) Clean the filter.

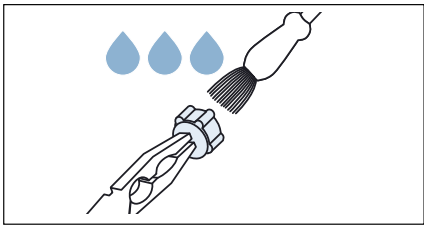

5. Connect the hose and check for leaks.

Faults and what to do about them.

Emergency release

e.g. in the event of a power cut

The programme will continue when the power supply is restored.

If the laundry needs to be removed, however, the door can be opened as follows:

Warning
Risk of scalding!
When washing at high temperatures, there is a risk of scalding if you come into contact with hot washing water and laundry.
If possible, leave it to cool down first.

Warning
Risk of injury!
You may injure your hands if you reach into the drum while it is turning.
Do not reach into the drum while it is turning.
Wait until the drum has stopped turning.

Caution!
Water damage
Any escaping water may cause water damage.
Do not open the door if you can see water through the glass.

1. Switch off the appliance. Pull out the mains plug.
2. Drain the washing water.
   → *Page 46*
3. Use a tool to pull the emergency release downwards and then release.

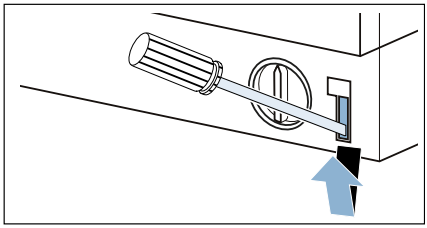

4. Open the door.

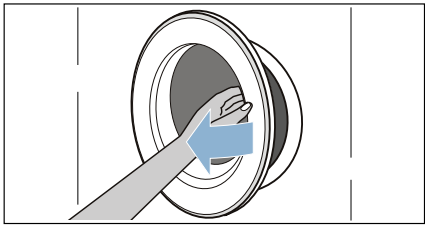

Information on the display panel

Indicator/symbol	Cause/remedy
has lit up	■ The temperature is too high. Wait until the temperature drops. ■ The water level is too high. It is not possible to add laundry. Close the washing machine door immediately, if necessary. Press the button to continue the programme.
is flashing	■ Laundry may be caught. Open and close the door again and press the button. ■ If necessary, push the door closed or remove the trapped laundry and then push it closed again. ■ If necessary, switch the appliance off and on again; select a programme and configure the settings; start the programme.
has lit up	■ Turn on the cold water tap fully, ■ Supply hose kinked/trapped, ■ The water pressure is too low. Clean the filter. ⟶ *Page 48*
	The childproof lock is activated – deactivate it. ⟶ *Page 39*
: the "Ready in" time is flashing	The mains voltage is too low.
.the "Ready in" time is flashing	Undervoltage during the wash programme. The length of the programme will be extended. ⟶ *Page 42*
E:18	■ The drain pump is blocked. Clean the drain pump. ⟶ *Page 46* ■ The drain hose/drain pipe is blocked. Clean the drain hose at the siphon. ⟶ *Page 47*
E:23	There is water in the base trough; the appliance is leaking. Turn off the tap. Call our after-sales service.
E:32	is flashing alternately with **End** at the end of the programme. Not a fault – the unbalanced load detection system has interrupted the spin cycle because the laundry is unevenly distributed. Distribute small and large items of laundry evenly in the drum. Run the spin cycle again, if necessary.
Other indicators/ symbols	Switch off the appliance, wait for 5 seconds and then switch it back on. If the indicator/symbol appears again, call our after-sales service. ⟶ *Page 53*

Symbol in TimeLight* (display on the floor): *Depends on the model	Cause/remedy
	■ A fault has occurred ⟶ See "E" above: ... ■ See symbol above

Faults and what to do about them.

Faults	Cause/remedy
Water is leaking from the machine.	■ Attach the drain hose correctly or replace it. ■ Tighten the threaded joint on the supply hose.
The machine is not filling with water. Detergent is not being dispensed.	■ Have you pressed the ▷II button? ■ Is the tap turned on? ■ Could the filter be clogged? Clean the filter. ⟶ *Page 48* ■ Is the supply hose kinked or trapped?
The door will not open.	■ The safety function is activated. Do you want to stop the programme? ⟶ *Page 40* ■ Is the childproof lock activated? Deactivate it. ⟶ *Page 39* ■ Is "- -" selected (Rinse Stop = no final spin)? ⟶ *Page 40* ■ Can the door only be opened using the emergency release? ⟶ *Page 49*
The programme will not start.	■ Have you pressed the ▷II button? ■ Is **Ready in** selected? ■ Is the door closed? ■ Is the childproof lock activated? Deactivate it. ⟶ *Page 39*
The drum briefly jerks or judders after the programme has started.	Not a fault – the internal motor test may cause the drum to jerk or judder briefly when the wash programme starts.
The water is not draining.	■ Is "- -" selected (Rinse Stop = no final spin)? ⟶ *Page 40* ■ Clean the drain pump. ⟶ *Page 46* ■ Clean the drain pipe and/or the drain hose.
Water is not visible in the drum.	Not a fault – the water is below the visible area.
The spin result is not satisfactory. Laundry is wet/too damp.	■ Not a fault – the unbalanced load detection system has interrupted the spin cycle because the laundry is unevenly distributed. Distribute small and large items of laundry evenly in the drum. ■ Is the selected speed too low?
The spin cycle runs several times.	Not a fault – the unbalanced load detection system is adjusting an imbalance.
The programme is taking longer than usual.	■ Not a fault – the unbalanced load detection system is adjusting an imbalance by repeatedly distributing the laundry. ■ Not a fault – the foam detection system has activated an additional a rinse cycle.
The length of the programme changes during the wash cycle.	Not a fault – the programme sequence is optimised for the specific washing process. This may change the length of the programme shown in the display panel.
There is water remaining in the care product compartment ❀ .	■ Not a fault – the effectiveness of the care product is not affected. ■ Clean the insert, if necessary.

Faults	Cause/remedy
Odours in the washing machine.	Run the **Cottons 90 °C** programme without laundry. Add standard washing powder or a detergent that contains bleach. **Note: .** To prevent foaming, only use half the amount of detergent recommended by the detergent manufacturer.To prevent foaming, only use half the amount of detergent recommended by the detergent manufacturer. Do not use detergent designed for woollens or delicates.
Foam may also be leaking from the detergent drawer.	Have you used too much detergent? Mix one tablespoon of fabric softener with 1/2 litre of water and pour it into compartment **II** (not suitable for outdoor clothing, sportswear or items filled with down) Use less detergent in the next wash cycle.
Loud noises, vibrations and machine "wandering" during the spin and/or drain cycles.	■ Is the appliance level? Level the appliance. ⟶ *Page 20* ■ Are the appliance's feet secured? Secure the appliance's feet. ⟶ *Page 20* ■ Have the transport locks been removed? Remove the transport locks. ⟶ *Page 17*
The display panel/ indicator lights do not work while the appliance is running.	■ Has there been a power failure? ■ Have the fuses blown/has the circuit breaker tripped? Switch on the circuit breaker/replace the fuses. ■ If the fault occurs repeatedly, call our after-sales service.
There is detergent residue on the laundry.	■ Some phosphate-free detergents contain water-insoluble residue. ■ Select **Rinse** or brush the laundry after washing.
The symbol is lit in the display panel when paused.	■ The water level is too high. It is not possible to add laundry. Close the washing machine door immediately, if necessary. ■ Press the button to continue the programme.
The symbol in the display panel is off when paused.	The door is unlocked. It is possible to add laundry.
TimeLight* (display on the floor) will not light up. *Depends on the model	■ Has Timelight been activated? ⟶ *Page 43* ■ Energy saving mode is active. ⟶ *Page 13* ■ Has there been a power failure?

If you cannot rectify a fault yourself (after switching the appliance off and on again) or a repair is required:
- Switch off the appliance and pull the mains plug out of the socket.
- Turn off the tap and our after-sales service.

After-sales service

If you cannot rectify a fault yourself, contact customer services. ⟶ Cover page

We will always find an appropriate solution in order to avoid unnecessary visits by engineers.

Please give customer services the product number (E no.) and the production number (FD) of the appliance.

E-Nr. _____ **FD** _____

E no.	Product number
FD	Production number

You can find this information *depending on the model:

On the inside of the door*/in the opened service flap* and on the rear of the appliance.

Trust the expertise of the manufacturer.

Contact us for assistance. By doing so, you will ensure that the repairs are carried out by trained service personnel using genuine spare parts.

Technical data

Weight:
75 - 84 kg (depending on the model)

Mains connection:
Nominal voltage 220 - 240 V, 50 Hz

Nominal current 10 A

Nominal power 1900 - 2300 W

Water pressure:
100 - 1000 kPa (1 - 10 bar)

Power consumption when switched off:
0.12

Power consumption when left on:
0.50

Aqua-Stop warranty

Only for appliances with Aqua-Stop

In addition to warranty claims against the vendor based on the purchase agreement and to our appliance warranty, we will provide compensation under the following conditions:

1. If water damage is caused due to a fault in our Aqua-Stop system, we will compensate domestic customers for the damage caused.
2. The liability guarantee is valid for the service life of the appliance.
3. It is a prerequisite of all warranty claims that the appliance with Aqua-Stop must have been installed and connected correctly in accordance with our instructions; this also includes a correctly fitted Aqua-Stop extension (genuine accessories). Our warranty does not cover defective feed lines or fittings leading to the Aqua-Stop connection at the tap.
4. Appliances with Aqua-Stop do not need to be supervised during operation, nor secured afterwards by turning off the tap.
   The tap only needs to be turned off if you are away from home for a long period, e.g. for several weeks' holiday.

☏ Advice and repair order in the event of faults

GB 0344 892 8979 (Calls charged at local or mobile rate.)
IE 01450 2655 (0.03 € per minute at peak. Off peak 0.0088 € per minute.)

You can find the contact information for all countries in the attached after-sales service directory.

Robert Bosch Hausgeräte GmbH
Carl-Wery-Straße 34
81739 München, GERMANY

9001229756 (9611)