Operating instructions for washing machines

To avoid the risk of accidents or damage to the machine, it is **essential** to read these instructions before it is installed and used for the first time.

en-GB

M.-Nr. 10 201 050

Contents

Caring for the environment 6

Warning and Safety instructions 7

Operating the washing machine 14
Control panel 14
Standard display 16
Examples on how to operate the machine 16

Before using for the first time 17
Inserting detergent cartridges 17
Setting the language 19
Removing the transit bars 19
Setting the time of day (if necessary) 19
Starting the calibration programme 20

TwinDos 21

Washing environmentally and economically 22
EcoFeedback 23

1. Prepare the laundry 24

2. Select a programme 25

3. Load the washing machine 26

4. Select programme settings 27

5. Add detergent 29
TwinDos 29
Detergent dispenser drawer 30
CapDosing 31

6. Start the programme - the end of a programme 33

Spinning 35

Delay start 37
To select delay start 37
To change delay start 37
To cancel delay start and begin the programme straight away 38
To cancel delay start 38

Programme chart 39

Contents

Favourites ... 46
To create a favourite programme ... 46

Mixed items ... 48

Options ... 49
ProgrammeManager ... 49
Intensive ... 49
ECO ... 49
Extra gentle ... 49
Extra quiet ... 49
AllergoWash ... 49
Steam smoothing ... 50
Short ... 50
Stains ... 50
Further options ... 50
Rinse hold ... 50
Pre-wash ... 50
Water plus ... 50
Extra rinse ... 50
Wash programme chart - ProgrammeManager ... 51
Wash programme chart - Options ... 52
Wash programme chart - Further options ... 53

Programme sequence ... 54

Garment care label symbols ... 57

Changing the programme sequence ... 58
Cancelling a programme ... 58
Interrupting a programme ... 58
Changing a programme ... 58
Adding or removing laundry after the programme has started ... 59
Safety lock ... 60

Detergent ... 61
The correct detergent ... 61
Water softeners ... 61
Dispensing aids ... 61
Fabric conditioner and liquid starch ... 61
Miele recommended detergents ... 62
Recommended detergents in accordance with Directive (EU) Nr. 1015/2010 ... 63
Adding starch separately ... 65

Contents

Cleaning and care 66
Cleaning the drum (Hygiene info) 66
External casing and fascia panel 66
Cleaning the detergent dispenser drawer 66
Cleaning the TwinDos system 68
Starting the maintenance programme 68
Cleaning the compartments 69
Cleaning the water inlet filter 70

Problem solving guide 71
The programme does not start 71
The following fault messages appear in the display and the programme stops ... 72
A message appears in the display at the end of the programme 73
Problems with TwinDos 75
General problems with the washing machine 76
An unsatisfactory wash result 78
The door will not open 79
Opening the door in the event of a blocked drain outlet and/or power failure 80

After sales service 82
Repairs 82
Guarantee: U.K. 82
Guarantee: Other countries 82
Optional accessories 82

Installation and connection 83
Front view 83
Rear view 84
Installation surface 85
Transporting the washing machine to its installation site 85
Removing the transit bars 85
Re-fitting the transit bars 87
Levelling the machine 88
Screwing out and adjusting the feet 88
Building under a continuous worktop/ in a kitchen run 89
Washer-dryer stack 89
The water protection system 90
Connection to the water supply 92
Connection to the drainage system 94
Electrical connection U.K. 95

Consumption data 96
Note for test institutes 97

Technical data 98

Settings 99
To exit Settings 99
Language ⚑ 100
TwinDos 100
Time of day 102
Degree of soiling 103
Buzzer volume 103
Keypad tone 103
Total consumption 103
Code 104
Temperature unit 104
Display brightness 104
Display switch-off setting 104
Machine switch-off setting 105
Display maximum load 105
Memory 105
Longer pre-wash Cottons 105
Soak duration 106
Gentle action 106
Reduce temp. 106
Water plus level 106
Maximum rinse level 106
Suds cooling 107
Low water pressure 107
Anti-crease 107
Delay start 107

Optional accessories 108
Detergent 108
Specialist detergents 108
Fabric care 109
Additives 109

Caring for the environment

Disposal of the packing material

The packaging is designed to protect the appliance from damage during transportation. The packaging materials used are selected from materials which are environmentally friendly for disposal and should be recycled.

Recycling the packaging reduces the use of raw materials in the manufacturing process and also reduces the amount of waste in landfill sites.

Disposing of your old appliance

Electrical and electronic appliances often contain valuable materials. They also contain specific materials, compounds and components, which were essential for their correct function and safety. These could be hazardous to human health and to the environment if disposed of with your domestic waste or if handled incorrectly. Please do not, therefore, dispose of your old appliance with your household waste.

Please dispose of it at your local community waste collection / recycling centre for electrical and electronic appliances, or contact your dealer or Miele for advice. You are also responsible (by law, depending on country) for deleting any personal data that may be stored on the appliance being disposed of. Please ensure that your old appliance poses no risk to children while being stored prior to disposal.

This washing machine complies with current safety requirements. Inappropriate use can, however, lead to personal injury and damage to property.

To avoid the risk of accidents and damage to the machine, please read these instructions carefully before using it for the first time. They contain important information on its safety, use and maintenance.
Keep these instructions in a safe place and ensure that new users are familiar with the content. Pass them on to any future user.

Correct application

▶ This washing machine is intended for use in domestic households and similar working and residential environments.

▶ The washing machine is not intended for outdoor use.

▶ It must be used only as a domestic appliance to wash items which are specified by the manufacturer as being washable on the wash care label. Miele cannot be held liable for damage resulting from incorrect or improper use or operation.

▶ The washing machine can only be used by people with reduced physical, sensory or mental capabilities, or lack of experience or knowledge, if they are supervised whilst using it or have been shown how to use it safely and recognise and understand the consequences of incorrect operation.

Safety with children

▶ Children under 8 years of age must be kept away from the washing machine unless they are constantly supervised.

▶ Children 8 years and older may only use the washing machine unsupervised if they have been shown how to use it safely and recognise and understand the consequences of incorrect operation.

▶ Children must not be allowed to clean or maintain the washing machine unsupervised.

▶ Please supervise children in the vicinity of the washing machine and do not let them play with it.

Technical safety

▶ Please observe the instructions in "Installation and connection" and "Technical data".

▶ Before setting up the washing machine, check it for any externally visible damage. Do not install or use a damaged machine.

▶ Before connecting the washing machine, ensure that the connection data on the data plate (fuse rating, voltage and frequency) match the mains electricity supply. If in any doubt, consult a qualified electrician.

▶ Reliable and safe operation of this washing machine can only be assured if it has been connected to the mains electricity supply.

▶ The electrical safety of this washing machine can only be guaranteed when correctly earthed.
It is essential that this standard safety requirement is met. If in any doubt, please have the wiring system of the building tested by a qualified electrician.
Miele cannot be held liable for the consequences of an inadequate earthing system (e.g. electric shock).

▶ Do not connect the washing machine to the mains electricity supply by a multi-socket adapter, extension lead or similar. These do not guarantee the required safety of the machine (fire hazard due to the risk of overheating).

▶ Faulty components must only be replaced by genuine Miele original spare parts. Only when these parts are fitted can Miele guarantee the safety standards of the machine.

▶ The electrical socket must be easily accessible after installation so that the machine can be disconnected from the electricity supply if necessary.

▶ Unauthorised repairs could result in unforeseen dangers for the user, for which the manufacturer cannot accept liability. Repairs should only be undertaken by a Miele authorised service technician, otherwise any subsequent damage will not be covered by the guarantee.

▶ If the electrical connection cable is faulty it must only be replaced by a Miele authorised service technician to protect the user from danger.

▶ The machine must be isolated from the electricity supply when cleaning and maintaining the machine and in the event of a fault.

▶ The Miele "Water protection system" protects from water damage provided the following conditions are met:

– the machine is correctly plumbed in and connected to the electricity supply.
– if a fault or damage has been identified, the machine must be examined by a competent person before further use, and repaired if necessary.

▶ The water flow pressure must be at least 100 kPa and should not exceed 1000 kPa.

▶ In areas which may be subject to infestation by cockroaches or other vermin, pay particular attention to keeping the machine and its surroundings in a clean condition at all times. Any damage which may be caused by cockroaches or other vermin will not be covered by the guarantee.

▶ The machine must not be used in a non-stationary location (e.g. on a ship).

▶ Do not make any alterations to the machine, unless authorised to do so by Miele.

▶ This washing machine is supplied with a special lamp to cope with particular conditions (e.g. temperature, moisture, chemical resistance, abrasion resistance and vibration). This special lamp must only be used for the purpose it is intended for. It is not suitable for room lighting. Replacement lamps may only be fitted by a Miele authorised person or the Miele Service Department.

Correct use

▶ Do not install the washing machine in a room where there is a risk of frost. Frozen hoses may burst or split. The reliability of the electronic control unit may be impaired at temperatures below freezing point.

▶ Before using the machine for the first time, check that the transit bars at the rear of the machine have been removed (see "Installation and connection - Removing the transit bars"). During spinning, a transit bar which is still in place may result in damage to both the machine and adjacent furniture or appliances.

▶ Turn off the stopcock if the machine is to be left for any length of time (e.g. holiday), especially if there is no floor drain (gully) in the immediate vicinity.

▶ Flooding danger.
If hooking the drain hose into a wash basin, check that the water can drain off quickly enough to prevent the sink from overflowing. Make sure the drain hose is secure, so that the force of the water flowing out of the hose does not dislodge it.

▶ Take care to ensure that foreign objects (e.g. nails, pins, coins, paper clips) do not find their way into the machine with the laundry. These may damage components of the machine (e.g. suds container, drum), which in turn can result in damage to the laundry.

▶ Take care when opening the drum door after using the steam function. Danger of burning due to escaping steam and the high temperature of the surface of the drum as well as the porthole glass. Stand back away from the machine and wait until the steam has dissipated.

▶ The maximum load for this washing machine is 9 kg (dry weight). See the "Programme chart" for the maximum recommended loads for individual programmes.

▶ If the correct amount of detergent is dispensed, the machine should not need to be descaled. If, however, you do wish to descale it, only use a proprietary natural citric acid based descaling agent. Miele recommends using Miele descaling agent which is available to order online at www.miele-shop.com or from Miele. Strictly observe the instructions on the packaging.

▶ Textiles which have been pre-treated in solvent based cleaning agents must be thoroughly rinsed in clean water before being washed in the machine.

▶ Do not use solvent based cleaning agents, e.g. those containing benzine, in this machine, as this may result in damage to component parts and create toxic fumes. Such agents also pose a fire and explosion hazard.

▶ Do not use solvent based cleaning agents, e.g. those containing benzine, to clean the surfaces of the machine. They can cause damage to plastic surfaces.

▶ Only use dyes specified by the manufacturer as being suitable for use in a domestic washing machine. Always observe the manufacturer's instructions carefully.

▶ Colour run and dye removers contain sulphur compounds which can cause damage such as corrosion. Do not use these products in this machine.

▶ If detergent comes into contact with the eyes, rinse them thoroughly with lukewarm water immediately. If swallowed, seek medical assistance immediately and retain the packaging or label for reference. Those with skin problems or sensitive skin should avoid their skin coming into contact with detergent.

Accessories

▶ Accessory parts may only be fitted when expressly approved by Miele. If other parts are used, guarantee, performance and product liability claims will be invalidated.

▶ A Miele tumble dryer can be stacked on top of a Miele washing machine using the appropriate stacking kit (available as an optional accessory). Please make sure you order the correct one for the Miele washing machine and Miele tumble dryer.

▶ If installing the machine on a Miele plinth, (available as an optional accessory, depending on country), please make sure you order the correct one for this washing machine.

Miele cannot be held liable for damage caused by non-compliance with these Warning and Safety instructions.

Operating the washing machine

Control panel

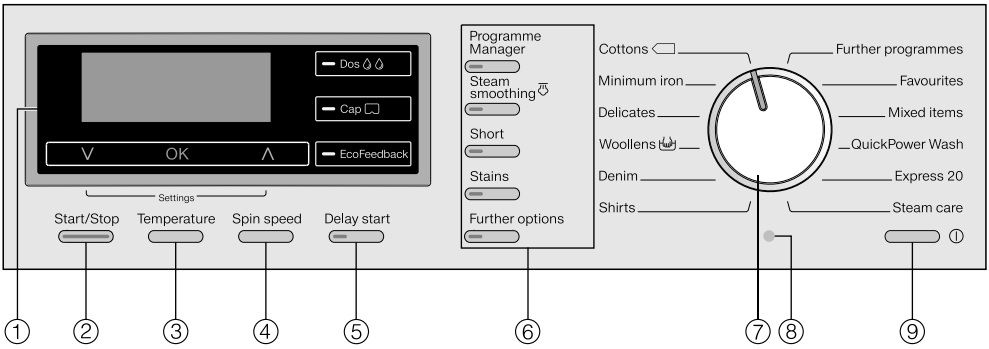

① **Display with sensors**
See the next page for more information.

② **Start/Stop button**
For starting the programme selected and cancelling a programme once it has started.

③ **Temperature button**
For selecting the temperature.

④ **Spin speed button**
For selecting the spin speed.

⑤ **Delay start button**
For selecting delay start.

⑥ **Option buttons**
Various options can be added to the wash programme.

⑦ **Programme selector**
For selecting the wash programme.

⑧ **Optical interface PC**
For service technicians.

⑨ **⏻ button**
For switching the washing machine on and off.
To save energy the washing machine will switch off automatically 15 minutes after the end of the programme/anti-crease phase or after being switched on if no other selection is made.

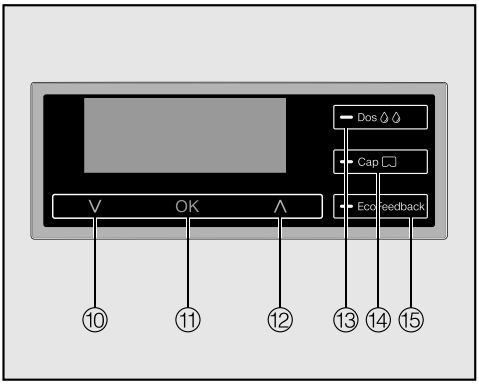

⑩ ∨ **sensor**
Scrolls down the list to the next option or decreases a value.

⑪ **OK button**
Confirms the programme selected, a value set or opens a sub-menu.

⑫ ∧ **sensor**
Scrolls up the list to the next option or increases a value.

⑬ **Dos sensor**
Switches on automatic detergent dispensing.

⑭ **Cap sensor**
Activates cap dosing via the detergent dispenser drawer.

⑮ **EcoFeedback sensor**
Provides information about the energy and water consumption of the programme. Please also refer to "Washing environmentally and economically - EcoFeedback".

Sensors ⑩ to ⑫ light up when the display can be operated via the sensors.

Programme duration

After the programme has started the programme duration will appear in the display in hours and minutes.

If delay start has been selected, the programme duration will appear at the end of the delay start time.

Delay start

The delay start time selected will appear in the display.

After the programme has started the delay start time will begin to count down.

Once the delay start time has elapsed, the estimated programme duration will appear in the display.

Standard display

The standard display shows the following from left to right:

- the programme selected
- the time of day
- the programme duration
- the selected wash temperature
- the selected spin speed

Examples on how to operate the machine

Scrolling through and selecting options from a single option list

The ⅈ on the right hand side of the display shows you that a list is available. The option currently selected is highlighted in white.

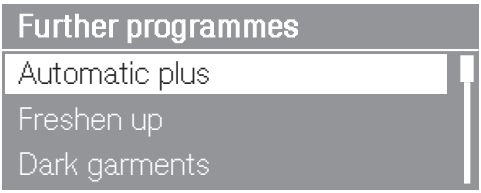

Touching the ∨ sensor scrolls down the list to the next option and touching the ∧ sensor scrolls up the list to the next option. The *OK* sensor is used to activate the option highlighted in white.

The beginning or end of the list is marked by a dotted line. The bar on the right hand side moves with you as you scroll through the list to show which option you have reached in the list.

Scrolling through and selecting options from a multiple option list

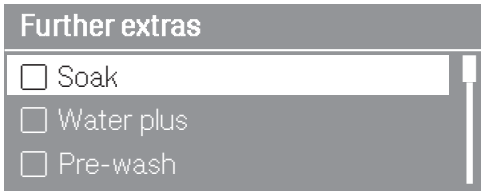

An option which has been activated will have a tick ✓ next to it.

Setting numerical values

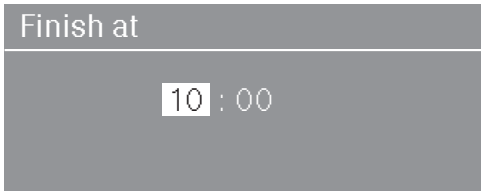

A numerical value is highlighted in white. Touching the ∨ sensor decreases the value and touching the ∧ sensor increases it. The *OK* sensor is used to activate the value highlighted in white.

Exiting a sub-menu

Select Back ⮌ to exit a sub-menu.

Removing the detergent cartridges from the drum

There are two cartridges containing UltraPhase1 and UltraPhase2 detergent for automatic detergent dispensing in the drum.

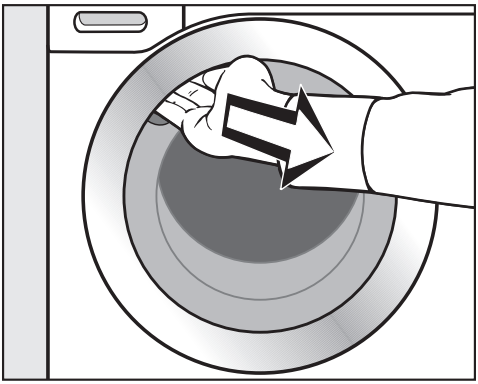

- Reach under the door grip and pull the door open.
- Take the two cartridges out of the drum.

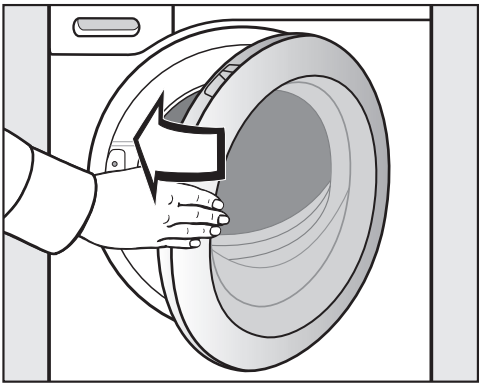

- Shut the door with a gentle swing.

Inserting detergent cartridges

The detergent cartridges removed from the drum are components of the Miele 2-phase system consisting of:

1. UltraPhase 1 (base detergent)
2. UltraPhase 2 (detergent enhancer)

These detergent cartridges are for single use only. Replacement detergent cartridges are available to order from Miele or via the internet at www.miele-shop.com (see end of this booklet for details). Empty cartridges should be disposed of via your local recycling system.

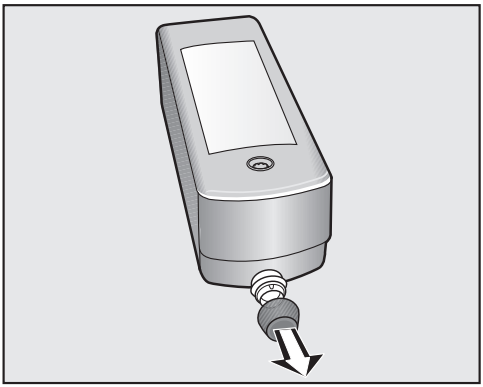

- Remove the caps from the detergent cartridges.

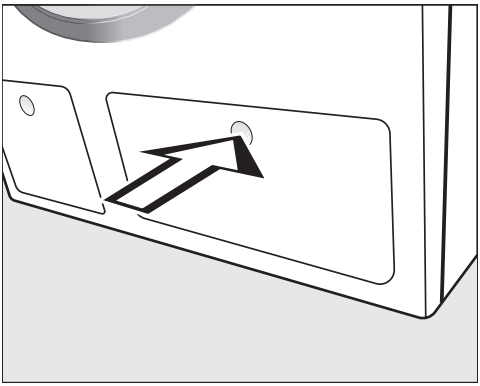

■ Press the TwinDos access panel.

The panel will spring open.

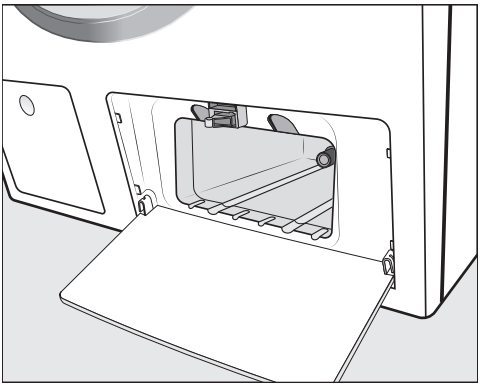

■ Drop the panel down.

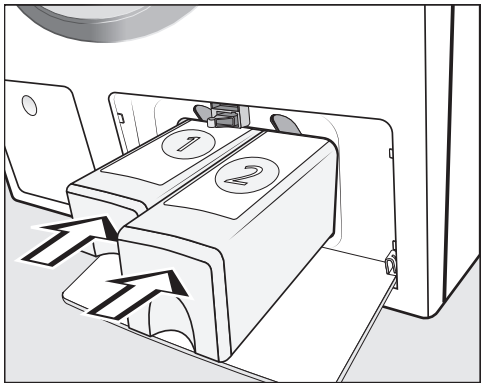

■ Push the **UltraPhase 1** cartridge into **compartment 1** and the **UltraPhase 2** cartridge into **compartment 2**, until they lock into position.

The TwinDos system is now ready for use.

Remove the protective foil and stickers

■ Remove

– the protective foil from the door.

– any stickers from the front and the lid.

⚠ Please do not remove any labels (e.g. the data plate), visible when you open the door.

This washing machine has undergone a complete functional test at the factory and there will be some residual water in the drum from this process.

⚠ Before using the machine for the first time ensure that it is correctly installed and connected. See "Installation and connection". Also check that the drain filters are securely tightened to prevent the risk of water leaks during use.

Switch on the washing machine

- Press the ⏻ button.

The welcome screen will light up.

Setting the language

You will be asked to select the language you want for the display. It is possible to change the language at any time via the Settings menu.

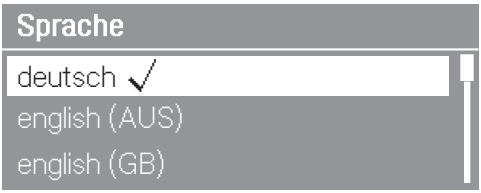

- Touch the ∨ or ∧ sensor until the language you want is highlighted in white.
- Confirm your selection of the language by touching the *OK* sensor.

Removing the transit bars

A reminder to remove the transit bars will appear in the display.

⚠ Failure to remove the transit bars can result in damage to the washing machine and to adjacent cabinetry or appliances.
Remove the transit bars as described in "Installation and connection".

- Confirm the removal of the transit bars with the *OK* sensor.

Setting the time of day (if necessary)

The display for setting the time will then appear. First you have to select the clock format.

- Touch the ∨ sensor if you would like a 12 hour clock display.
- Confirm your choice for the clock format with the *OK* sensor.

The display will switch automatically to the time of day selection.

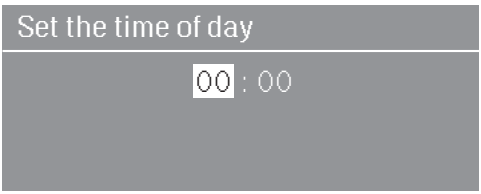

- Touch the ∨ sensor to decrease or the ∧ sensor to increase the hour.
- Confirm the hour selected with the *OK* sensor. Then set the minutes in the same way.

Tip: If you have selected the 12 hour clock format you can then select am or pm.

Starting the calibration programme

The following message appears in the display:

ℹ Open the stopcock and run the Cottons 90°C programme without laundry.

- Confirm the message with the *OK* sensor.

For optimum water and energy consumption and excellent wash results, it is important to calibrate the washing machine.

To do this the *Cottons 90 °C* **must** be started without laundry and without detergent.

No other programmes can be started until calibration has been carried out.

- Open the stopcock.
- Turn the programme selector to *Cottons*.

- Press the *Start/Stop* button.

The calibration programme has started. This will take approx. 2 hours.

At the end of the programme the following message will be displayed:

ℹ Set up completed

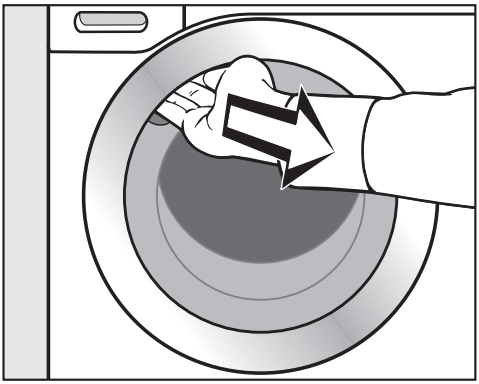

- Reach under the door grip and pull the door open.

Tip: Leave the door slightly open to allow the drum to dry.

- Switch the washing machine off with the ⏻ button.

The washing machine has an integrated detergent dispensing unit.

The TwinDos system can be used in two ways:

1. with the Miele 2 Phase System

   or

2. with any other liquid detergent and/or fabric conditioner.

The Miele 2 Phase system

The Miele 2 Phase system uses a base detergent (UltraPhase 1) and a detergent enhancer (UltraPhase 2). In order to achieve optimum results, the agents are dispensed separately during the wash process. The 2 Phase system cleans both white and coloured textiles thoroughly. UltraPhase 1 and UltraPhase 2 single use cartridges are available to order from Miele or via the internet at www.miele-shop.com (see end of this booklet for contact details).

Liquid detergent/Fabric conditioner

Refillable TwinDos containers are required for liquid detergent and/or fabric conditioner. These are available to order from Miele or via the internet at www.miele-shop.com (see end of this booklet for details).

How TwinDos works

Automatic detergent dispensing for a wash cycle is activated via the *Dos* sensor.

Tip: The washing machine is delivered pre-set for the Miele 2 Phase system for hardness range II ( ).

The settings only need to be changed if you wish to use a different detergent or if the water hardness is different.
See "Settings - TwinDos" for more information.

Automatic dispensing cannot be selected with some programmes, depending on the detergent present in the TwinDos system. For example, automatic dispensing cannot be activated for the Woollens programme if the Miele 2 Phase system is being used. This prevents woollen garments being damaged by a detergent which is not suitable for washing wool.

Washing environmentally and economically

Energy and water consumption

- Water consumption and energy usage are determined by the size of the load.
  To make the most of your machine, load the maximum dry load for the programme you are using.
- When smaller amounts of laundry are washed, the automatic load recognition system will reduce the amount of water and energy used.
- Use the *Express 20* programme for small, lightly soiled loads.
- Modern detergents make it possible to wash at lower temperatures (e.g. *20 °C*). Washing using lower temperature settings will save energy.
- To maintain the hygiene of the machine, carry out a hot wash (60 °C or above) using powder detergent at regular intervals. Hygiene info will appear in the display to remind you to carry out a hot wash.

Detergent

- For precise dispensing use automatic detergent dispensing.
- Adjust the dosage to the degree of soiling of the laundry.
- Do not exceed the amounts of detergent recommended by the manufacturer on the packaging.

When drying with a tumble dryer

Selecting the highest possible spin speed for the wash programme will save energy when drying in a tumble dryer afterwards.

EcoFeedback

You can call up information about the energy and water consumption of your washing machine with the *EcoFeedback* sensor.

The following information will appear in the display:

– an estimate of the energy and water consumption before the programme begins.

– the actual energy and water consumption during the programme or at the end of the programme.

1. Estimate

■ After selecting a programme, touch the *EcoFeedback* sensor.

The estimated energy and water consumption levels will be displayed as bar charts.

Estimated consumption	
Energy	▮▮▮▮_ _ _ _ _ _
Water	▮▮▮_ _ _ _ _ _ _

The more bars (▮) visible, the higher the energy or water consumption.

The estimate will vary depending on the wash programme, temperature and any options selected.

The display will change automatically or you can return to the standard display by touching the *OK* sensor.

2. Actual consumption

You can view the actual amount of energy and water used by the programme which has just been run both during and at the end of the programme.

■ Touch the *EcoFeedback* sensor.

Consumption		
Energy	0,8	kWh
Water	64	l

The consumption will alter as the programme progresses.

If the door is opened or the washing machine has switched off automatically at the end of the programme, the data will revert to the estimated consumption.

Tip: You can view the consumption data for the last wash programme in *Settings* under Consumption.

1. Prepare the laundry

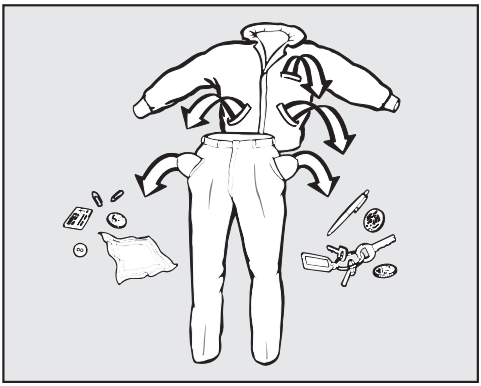

■ Empty all pockets.

⚠ Foreign objects (e.g. nails, coins, paper clips, etc.) can cause damage to garments and to components in the machine.
Check the laundry before washing and remove any foreign objects.

Sort the laundry

■ Sort the laundry by colour and by care label. Most garments have a textile care label in the collar or side seam.

Tip: Dark textiles often contain excess dye and should be washed separately several times before being included in a mixed load. Always wash whites and coloureds separately.

Pre-treat stains

■ Badly soiled areas, stains etc. should be cleaned as soon as possible, preferably whilst still fresh. Spillages should be carefully dabbed off using a soft, colourfast cloth. Do not rub.

Tip: Badly soiled areas can be pre-treated with liquid detergent, stain removers etc. first, following the manufacturer's instructions. With particularly stubborn stains ask your dry cleaner for advice.

⚠ Solvent-based cleaners (e.g. benzine) can damage plastic parts.
When pre-treating garments, make sure that any plastic parts (e.g. buttons) are protected from cleaning agent.

⚠ Chemical (solvent-based) cleaning agents can cause severe damage to the washing machine.
Do not use solvent-based cleaning agents in this machine.

General tips

– Curtains: Remove lead weights first or place in a laundry bag.

– Underwiring and collar stiffeners: Any loose wiring in bras, shirt collar stiffeners, etc. should be removed or sewn in.

– Close any zips, attach velcro fasteners, fasten hooks and eyes etc. before washing.

– Fasten duvet covers, pillow cases etc. to prevent small items from being rolled up inside them.

Do not wash any items in this washing machine which are specified by the manufacturer as **not washable** on the care label (symbol).

Switch on the washing machine

■ Press the ⏻ button.

The interior drum lighting will come on.

The drum lighting will go out automatically after five minutes. Press the *Start*/*Stop* button to switch the drum lighting back on again.

Programme selection

A. Selecting a programme via the programme selector:

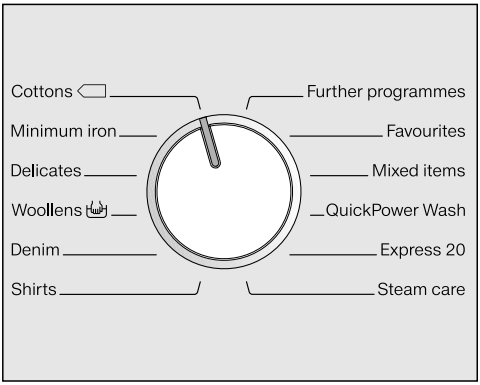

■ Turn the programme selector to the required programme.

The load for the programme selected will appear in the display. This will then be replaced by the standard display.

B. Selecting a programme using the programme selector at the "Further programmes" position:

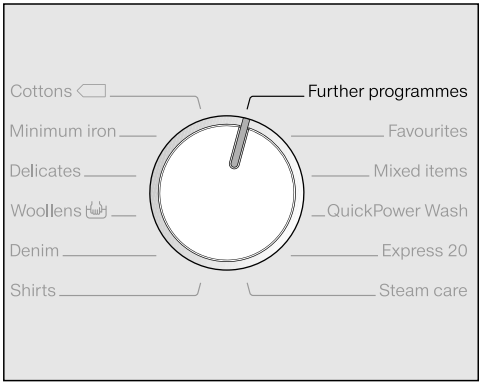

■ Turn the programme selector to *Further programmes*.

The following will appear in the display:

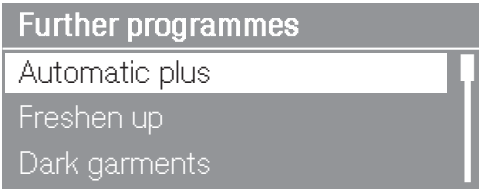

■ Touch the ∨ or ∧ sensor until the programme you want is highlighted in white.

■ Confirm the programme with the *OK* sensor.

The load for the programme selected will appear in the display. This will then be replaced by the standard display.

3. Load the washing machine

Open the door

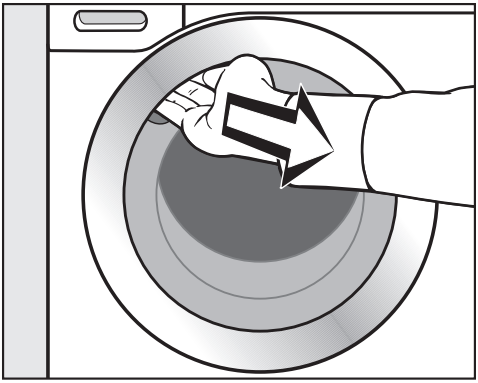

- Reach under the door grip and pull the door open.

Check the drum for pets or foreign objects before loading it with laundry.

- Unfold the laundry and load loosely into the drum.

Mixing both large and small items gives better wash results and also helps distribute the load evenly during spinning.

Please note the maximum load for the different wash programmes. The relevant programme load is always shown in the display when you select a programme.

The most efficient use of energy and water is achieved when a full load is washed. However, do not overload as this reduces cleaning efficiency and causes creases.

Close the door

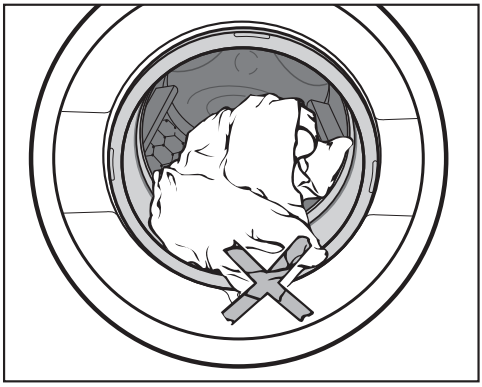

- Make sure that no items are caught between the door and the seal.

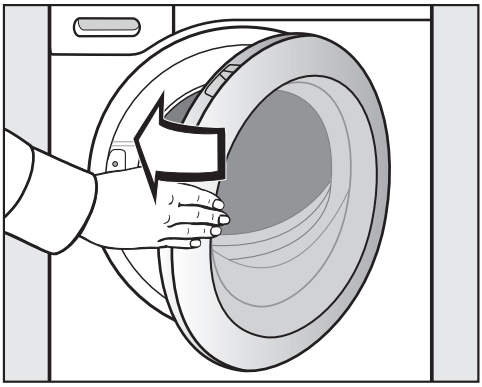

- Shut the door with a gentle swing.

Degree of soiling

Lightly soiled
No visible dirt or stains. Possibly slight body odour.

Normally soiled
Visibly dirty and/or just a few slight stains.

Heavily soiled
Soiling and/or stains clearly visible.

The following will appear in the display:

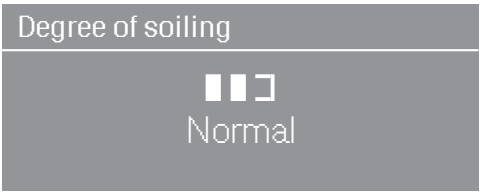

- Set the degree of soiling with the ∨ and ∧ sensors and confirm your selection with the *OK* sensor.

The following parameters will change depending on the degree of soiling selected:

- the detergent dosage amount with automatic detergent dispensing
- the rinse water level will be adjusted
- the programme durations (with light soiling the programme duration will be shorter)

In the Express 20 programme the degree of soiling cannot be selected. Express 20 is designed for lightly soiled laundry.

Tip: You can alter the default setting for the degree of soiling or switch off the degree of soiling query in Settings (see "Settings - Degree of soiling").

Select a temperature

You can alter the pre-set temperature of a wash programme.

- Press the *Temperature* button.

The following will appear in the display:

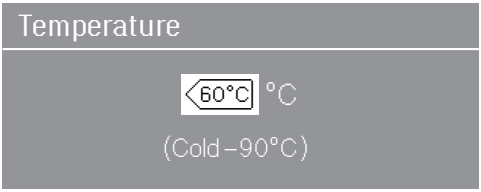

- Set the temperature you want with the ∨ and ∧ sensors and confirm your selection with the *OK* sensor.

Selecting a spin speed

You can alter the pre-set spin speed of a wash programme.

■ Press the *Spin speed* button.

The following will appear in the display:

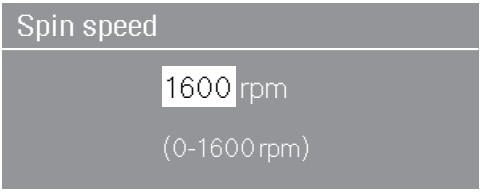

■ Set the spin speed you want with the ∨ and ∧ sensors and confirm your selection with the *OK* sensor.

Select options

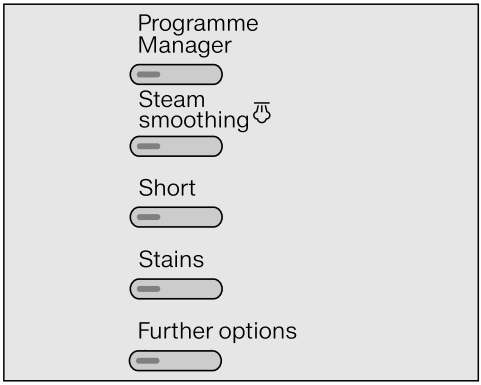

■ Press the button for the option you want.

The indicator light in the button will come on.

Not all options are suitable for use with every programme. You can only select options which are compatible with the programme being used.

See "Options".

Switch on delay start (if required)

The start of a programme can be delayed from 15 minutes up to 24 hours, allowing you to make use of night-time economy electricity rates, for example.

See "Delay start".

There are several options for adding detergent.

TwinDos

Before using TwinDos for the first time the display will show information about the factory default settings for TwinDos. The following will appear in the display:
UltraPhase 1 and UltraPhase 2 are set for medium water hardness. Dosage amounts and detergents can be changed in "Settings/"TwinDos"

■ Touch the *OK* sensor to confirm.

Miele 2 Phase system

UltraPhase 1 and UltraPhase 2 need to be dispensed in different ratios depending on the colour mix of the laundry load.

■ Touch the *Dos* sensor.

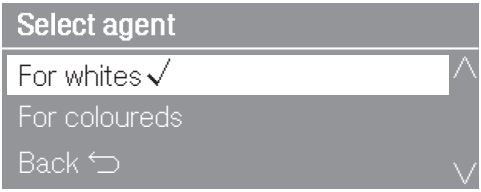

■ Use the ∨ and ∧ sensors to select the colour mix of the laundry and confirm with the *OK* sensor.

UltraPhase 1 and UltraPhase 2 will be dispensed accordingly.

Liquid detergent/Fabric conditioner

It is possible to use other types of liquid detergent/fabric conditioner. Refillable TwinDos containers (optional accessories) are required for this.

The washing machine's electronic settings need to be adjusted accordingly. See "Settings - TwinDos".

■ Touch the *Dos* sensor.

■ Confirm the option displayed with the *OK* button or select another detergent or fabric conditioner with the ∨ and ∧ sensors.

Tip: The recommended detergent(s) is shown in the display and marked with a tick (✓).

The appropriate amount of detergent and/or fabric conditioner for the programme will now be dispensed.

5. Add detergent

Detergent dispenser drawer

Too little detergent results in:

- Laundry not getting properly clean and with time it may become grey and hard to the touch.
- Greasy particles clinging to laundry.
- Limescale deposits on the heater elements.

Too much detergent results in:

- Excessive foam which causes a low level of agitation and poor wash, rinse and spin results.
- High water consumption (an additional rinse cycle will automatically switch in).
- A burden to the environment.

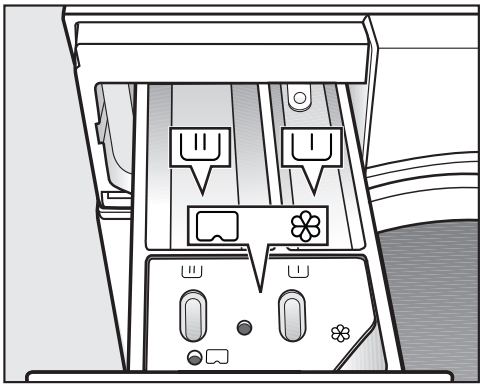

■ Pull out the detergent dispenser drawer and add detergent to the compartments as follows:

I

Detergent for the pre-wash (divide the total recommended amount as follows: add ⅓ to compartment I and ⅔ to compartment II)

II

Detergent for the main wash, including Soak, if selected

❀/

Fabric conditioner, liquid starch or capsules.

See "Detergent" for further information.

CapDosing

Three different types of capsule are available:

❀ = Fabric care (e.g. fabric conditioner, proofing agent)

△ = Additives (e.g. detergent enhancers)

💧 = Detergent (for the main wash only)

Each capsule contains the correct amount for one wash cycle.

You can order the capsules online at www.miele-shop.com or from Miele (see the end of this booklet for contact details).

⚠ Keep capsules out of the reach of children.

Activating CapDosing

■ Touch the *Cap* ▭ sensor.

The first type of capsule which can be selected for the programme will appear in the display.

■ Select the type of capsule you want with the ∨ and ∧ sensors and confirm your selection with the *OK* sensor.

Inserting a capsule

■ Open the detergent dispenser drawer.

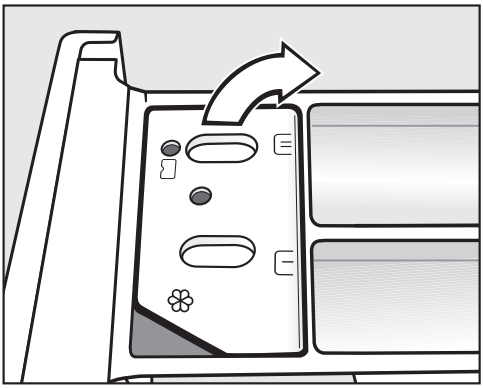

■ Open the lid of the ❀/▭ compartment.

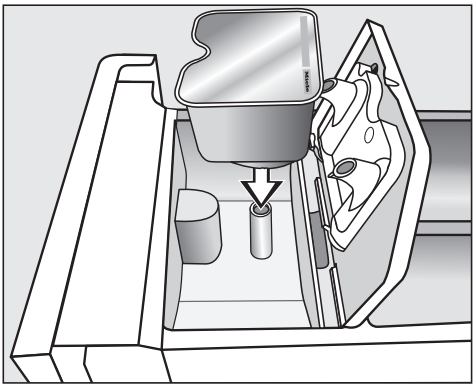

■ Press the capsule in firmly.

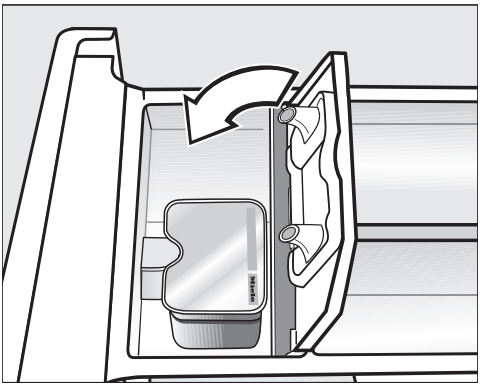

- Close the lid and press it firmly shut.
- Close the detergent dispenser drawer.

The capsule is opened by the act of inserting it in the detergent dispenser drawer. The contents can run out of the capsule if you then remove it from the drawer before it is used.
In this case, dispose of the capsule and do not re-use it.

The wash programme will dispense the contents of the capsule at the correct time.

Water intake to the ❀ compartment is solely via the capsule.
No additional fabric conditioner may be added to the ❀ compartment when using a capsule.

- Remove the empty capsule at the end of the programme.

For technical reasons a small amount of water will remain in the capsule.

Deactivating/changing CapDosing

- Touch the *Cap* ⌂ sensor and follow the instructions in the display.

Adding stain remover

There are two options for adding stain remover in addition to using the automatic dispensing system:

– Use the Booster cap

– Add stain remover to the ⊔ compartment.

Start the programme

■ Touch the flashing *Start/Stop* sensor.

The door will lock (the 🔒 will appear in the display to show this) and the programme will start.

If a delay start time has been selected, then this will count down in the display. At the end of the delay start time or immediately after the programme has started (if no delay start time has been selected), the programme duration will appear in the display.

The programme sequence is also shown in the display. The washing machine lets you know which section of the programme has been reached.

The drum lighting switches off once the programme has started.

At the end of a programme

The door is still locked during the anti-crease phase and the following will appear alternately in the display:

Cottons 10:30

Anti-crease

60°C 1600 rpm

and

i

Press the Start/Stop button, then unload the drum

- Press the *Start/Stop* button. This will unlock the door.
- Pull open the door.
- Remove the laundry.

Items left in the drum could discolour other items in the next wash or become discoloured themselves. Check that all items have been removed from the drum.

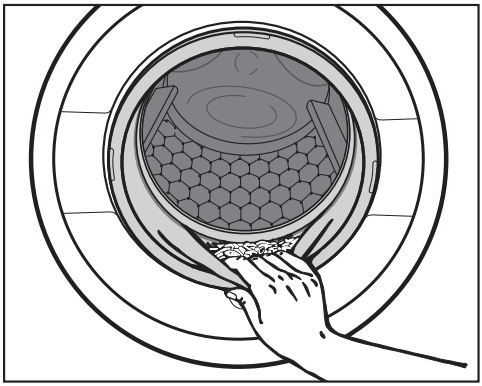

- Check the folds in the door seal for any small articles, e.g. buttons, which might be lodged there.

Tip: Leave the door slightly open to allow the drum to dry.

- Switch the washing machine off with the ⏻ button.
- If applicable, remove the used capsule from the detergent dispensing drawer.

Tip: Leave the detergent dispenser drawer slightly open to allow it to dry.

Final spin speed

Programme	rpm
Cottons	1600
Minimum iron	1200
Delicates	900
Woollens	1200*
Denim	900
Shirts	900
Automatic plus	1400
Freshen up	–
Dark garments	1200
Down duvets	1200
Outerwear	800
Proofing	1000
Separate rinse	1600*
Starch	1200
Silks	600*
Sportswear	1200
Down filled items	1200
Curtains	600
First wash	1200
Pillows	1200
Drain / Spin	1600
Maintenance wash	900
Mixed items	1200-1600
QuickPower wash	1600
Express 20	1200
Steam care	–

Final spin speed in the programme

When a programme is selected the optimum spin speed for that programme will appear in the display. For programmes marked with a * in the chart, the optimum spin speed is not the maximum spin speed.

You can reduce the final spin speed.

However, you cannot select a final spin speed higher than that shown in the chart.

Rinse and interim spin

There is a spin after the main wash and between the rinses. A reduction in the final spin speed will also reduce the interim spin speed. If a spin speed of less than 700 rpm is selected for the *Cottons* programme, an additional rinse is introduced.

To omit the final spin (Rinse hold)

- Use the *Further options* button to select the Rinse hold setting. The laundry is not spun after the final rinse and remains in the final rinse water. This helps prevent creasing if the laundry is not going to be removed from the drum immediately after the end of the programme.

– To start the final spin:
  The washing machine will display the maximum spin speed possible. You can select a spin speed lower than this. Start the final spin by pressing the *Start*/*Stop* button.

– To end the programme:
  Use the *Spin speed* button to select the 0 rpm setting (Without spin) and press the *Start*/*Stop* button.

  The water will drain away.

To omit rinse and interim spin and the final spin

- Press the *Spin speed* button.
- Select the 0 rpm setting.

After the last rinse, the water will be pumped away and the anti-crease phase will switch in.

In some programmes an additional rinse is introduced with this setting.

With delay start you can choose when you want the programme to start. You can delay the start of the programme from 15 minutes up to a maximum of 24 hours, allowing you to make use of night-time economy electricity rates, for example.

To select delay start

The time of day needs to be set for delay start to work correctly.

- Press the *Delay start* button.

The following will appear in the display:

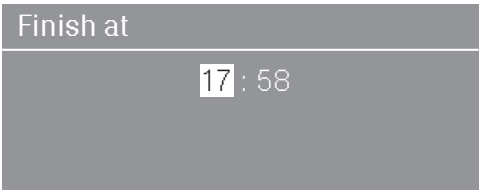

- Use the ∨ and ∧ sensors to enter the hour and confirm your entry with the *OK* sensor.

The minutes are now be highlighted in white and can be set.

The minutes entry is set to 00 and can be adjusted in 15 minute increments.

- Use the ∨ and ∧ sensors to enter the minutes and confirm your entry with the *OK* sensor.

Tip: The values will count upwards and downwards automatically if you touch the ∨ or ∧ sensor continuously.

To begin delay start

- Press the *Start/Stop* button to begin delay start and the wash programme.

The following will appear in the display:

When the delay start time has elapsed, the programme will begin and the display will show the programme duration and the programme sequence.

To change delay start

You can change delay start at any time.

- Press the *Delay start* button.

- Touch the *OK* sensor.
- Now enter the time you want.

To cancel delay start and begin the programme straight away

■ Press the *Delay start* button.

■ Touch the ∨ sensor.

Start now will be highlighted in white.

■ Touch the *OK* sensor. The wash programme will start.

To cancel delay start

■ Press the *Start/Stop* button.

■ Touch the *OK* sensor.

The standard display will reappear and the *Start/Stop* button will flash.

Cottons	**cold to 90 °C**	**Max. load 9.0 kg**
Use for	Cotton, linen or cotton mix fabric, e.g. table linen, towelling, underwear, T-shirts etc.	
Notes	The settings 60 °/40 °C differ from 60°C/40°C as follows: – Shorter programme durations – Longer temperature holding times – Higher energy consumption Where particularly high levels of hygiene are required please select a temperature of 60 °C or higher.	
Cottons	**60°C/40°C**	**Max. load 9.0 kg**
Use for	Normally soiled cotton garments.	
Notes	– These settings are the most efficient in terms of energy and water consumption for washing cottons. – With 60°C the actual wash temperature reached will be lower than 60 °C although the wash performance is the same as with the standard Cottons 60 °C programme.	
Note for test institutes: The test programme conforms to EN 60456 and the energy label to Directive 1061/2010.		
Minimum iron	**cold to 60 °C**	**Max. load 4.0 kg**
Use for	Synthetic, mixed fibre and easy care cotton.	
Note	Reduce the spin speed for fabric which creases easily.	

Programme chart

Delicates	**cold to 60 °C**	**Max. load 3.0 kg**
Use for	Delicate garments made from synthetic fibre, mixed fibre, rayon and viscose.	
Note	– Deselect the spin for items which crease easily.	
Woollens	**cold to 40 °C**	**Max. load 2.0 kg**
Use for	Machine-washable or hand-washable wool or wool blend fabric. If the care label does not specify a temperature, wash using the cold setting.	
Note	Reduce the spin speed for items which crease easily.	
Denim	**cold to 60 °C**	**Max. load 3.0 kg**
Notes	– Wash denim inside-out. – Denim often contains excess dye and may run during the first few washes. Wash light and dark coloured items separately. – Close any zips, do up buttons etc. before washing.	
Shirts	**cold to 60 °C**	**Max. load 1.0 kg/2.0 kg**
Use for	Shirts and blouses made of cotton and mixed fibre.	
Notes	– Pre-treat soiled cuffs and collars if necessary. – Wash silk shirts and blouses in the *Silks* programme. – If the pre-set *Steam smoothing* option is switched off, the maximum load capacity is increased to 2.0 kg.	
Automatic plus	**cold to 40 °C**	**Max. 6.0 kg**
Use for	Mixed loads of garments suitable for the *Cottons* and *Minimum iron* programmes.	
Note	The wash parameters (e.g. water level, wash rhythm and spin speed) are adjusted automatically in this programme to ensure the best possible care and wash result for each item.	

Freshen up	**Max. load 1.0 kg**
Use for	Dry, clean cotton, linen or mixed fibre garments which are slightly creased. The garments must be suitable for drying in a tumble dryer and suitable for ironing.
Notes	– Smaller loads give a better result. – Remove garments as soon as the programme has finished and then tumble dry using the Gentle smoothing programme or place on a hanger to dry. – Not suitable for garments made of wool or wool blend fabric.

Dark garments	**cold to 60 °C**	**Max. load 3.0 kg**
Use for	Black and dark items made of cotton or mixed fibres.	
Note	Wash inside out.	

Down duvets	**cold to 60 °C**	**Max. load 2.5 kg** **1 down duvet 2.20 m x 2.00 m**
Use for	Quilts, duvets and pillows with feather or down filling.	
Notes	– Remove air from the items before washing to prevent an excessive build-up of foam. To do this either push the items into a narrow laundry bag to compress them or tie the items together with a washable strap. – Observe the instructions on the wash care label.	

Programme chart

Outerwear	**cold to 40 °C**	**Max. load 2.5 kg**
Use for	Performance outerwear (e.g. jackets and trousers) made from membrane fabric such as Gore-Tex®, SYMPATEX®, WINDSTOPPER® etc.	
Notes	– Zip up or close jackets before washing. – Do not use fabric conditioner. – If wished, these garments can also be re-proofed using the *Proofing* programme. Proofing should not be done every time the garment is washed.	
Proofing	**40 °C**	**Max. load 2.5 kg**
Use for	Treating microfibre fabric, skiwear and table linen made from mainly synthetic fibres to provide a water and dirt resistant finish.	
Notes	– The items should be freshly laundered and spun or dried before proofing. – For best results, the items should be heat-treated afterwards either in a tumble dryer or by ironing.	
Separate rinse		**Max. load 9.0 kg**
Use for	Rinsing handwashed items.	
Note	Reduce the spin speed for items which crease easily.	
Starch		**Max. load 9.0 kg**
Use for	Starching table cloths, serviettes and workwear.	
Notes	– Reduce the spin speed for items which crease easily. – The laundry should be washed but not treated with fabric conditioner.	

Silks	**cold to 30 °C**	**Max. load 1.0 kg**
Use for	Silks and other handwashable fabric with no wool content.	
Note	Place tights, bras etc. in a laundry bag.	
Sportswear	**cold to 60 °C**	**Max. load 3.0 kg**
Use for	Sportswear such as singlets and leggings as well as microfibre and fleece garments.	
Notes	– Do not use fabric conditioner. – Observe the manufacturer's care label.	
Down filled items	**cold to 60 °C**	**Max. load 2.0 kg**
Use for	Jackets, sleeping bags, pillows and other down-filled items.	
Notes	– Remove air from the items before washing to prevent an excessive build-up of foam. To do this either push the items into a narrow laundry bag to compress them or tie the items together with a washable strap. – Observe the instructions on the wash care label.	
Curtains	**cold to 40 °C**	**Max. load 2.0 kg**
Use for	Curtains, including net curtains, specified as machine-washable by the manufacturer.	
Notes	– To remove dust, the *Pre-wash* option is selected automatically. – For curtains which crease easily, reduce the spin speed or deselect the spin. – Remove weights from curtains.	
First wash	**cold to 40 °C**	**Max. load 3.0 kg**
Use for	New cotton, towelling and synthetic items.	
Note	Use this programme to wash any manufacturing residues out of new items.	

Pillows	**cold to 60 °C**	**2 pillows (40 x 80 cm) or 1 pillow (80 x 80 cm)**
Use for	Synthetic filled washable pillows.	
Note	– Remove air from the pillow before washing to prevent an excessive build-up of foam. To do this either push the pillow into a narrow laundry bag to compress it or tie the pillow together with a washable strap. – Observe the instructions on the wash care label.	
Drain / Spin		**Max. load 8.0 kg**
Notes	– Drain only: Select 0 rpm for the spin speed. – Make sure you select the appropriate spin speed.	
Maintenance wash	**75 °C**	**Empty**
With frequent washing at low temperatures there is a danger of a build-up of bacteria in the washing machine. Cleaning the washing machine will significantly reduce bacteria, mould and biofilm and prevent the build-up of unpleasant odours.		
Notes	– Optimum results can be achieved by using Miele machine cleaner. Alternatively, a universal powder detergent can be used. – Dispense the machine cleaner or universal detergent directly into the drum. – Do not load any laundry. The drum must be empty for the maintenance wash.	
Favourites		
Note	You can save your own customised wash programmes as favourite programmes under names of your choice. These will then be sorted alphabetically. Please see "Favourites" for more information.	

Mixed items		**–**
Use for	A load consisting of various items with different garment care labels which is too small for a standard programme. You can choose from a list of 19 different items.	
Note	The washing machine automatically adjusts the wash process to suit the laundry mix. Please see "Mixed items" for more details.	
QuickPower wash	**60 °C – 40 °C**	**Max. load 5.0 kg**
Use for	Normally soiled garments which are also suitable for washing in the *Cottons* programme.	
Note	– A special saturation process and wash rhythm ensure that the laundry is cleaned particularly quickly and thoroughly.	
Express 20	**cold to 40 °C**	**Max. load 3.5 kg**
Use for	Cotton garments that have hardly been worn or are only very lightly soiled.	
Note	The *Short* option is activated automatically.	
Steam care		**Max. load 2.0 kg**
Use for	Reducing the amount of creasing in damp, freshly washed and spun cotton or linen garments. The garments must be suitable for drying in a tumble dryer and suitable for ironing.	
Notes	– 5-6 shirts make up a load of approx. 2.0 kg. – Smaller loads give a better result. – Remove garments as soon as the programme has finished and then tumble dry using the Gentle smoothing programme or place on a hanger to dry. – Not suitable for garments made of wool or wool blend fabric.	

You can save your own customised wash programmes under names of your choice.

The saved favourite programmes will be sorted alphabetically.

To create a favourite programme

You have selected and started your chosen programme.

- Press the *Start/Stop* button.

- Scroll through the list using the ∨ or ∧ sensor to:

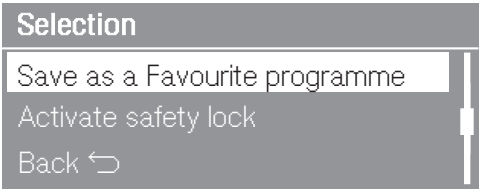

- Confirm with the *OK* sensor.

To enter a name

You can enter any name of up to 10 characters for the programme.

- Scroll through the list of characters with the ∧ and ∨ sensors until the first character you require is highlighted in white. Confirm the character with the *OK* sensor.

Tip: Key to the symbols: ␣ (space), 123 (numbers), ABC (upper case), abc (lower case), 🗑 (delete), ⮌ (back)

To save a name

- Scroll through the list of characters with the ∧ and ∨ sensors until the ✓ symbol is highlighted in white. Confirm the symbol with the *OK* sensor.

The programme will be saved under the name you have entered.

To delete a favourite programme

If you have already saved ten favourite programmes, you will need to delete one of these before you can save a new one.

- Turn the programme selector to *Favourites*.
- Select the Delete option in the display.
- Select the favourite programme you want to delete and confirm with the *OK* sensor.
- Confirm Delete with the *OK* sensor.

The favourite programme will be deleted.

Compiling the list of items

Use the Mixed items programme if you do not have enough laundry to run a standard programme but you want to wash a few lightly soiled items with different garment care instructions.

The washing machine will use the list of items to select the most suitable programme automatically.

- Turn the programme selector to *Mixed items*.

A list of items in alphabetical order will appear in the display.

- Use the ∨ and ∧ sensors to search for the item you want and confirm your selection with the *OK* sensor.

The item selected will have a ☑ next to it and the following will appear in the display:

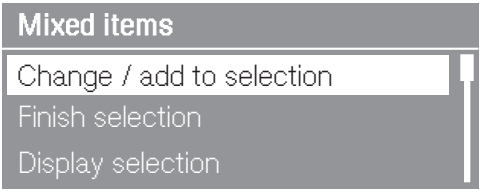

You can now select the following:

- Add another item:
  Change / add to selection
- Wash the items selected:
  Finish selection
- Display the items as a list:
  Display selection
- Delete the entire list of selected items:
  Clear selection (completely)

- Select the option you want with the ∨ and ∧ sensors and confirm your selection with the *OK* sensor.

Washing the items

You have put together the list of items and selected Finish selection.

Information regarding the programme may appear in the display, e.g. use of detergent.

- Confirm the information with the *OK* sensor.
- Press the *Start/Stop* button.

The programme will start.

Options are selected and deselected via the relevant buttons and the display.

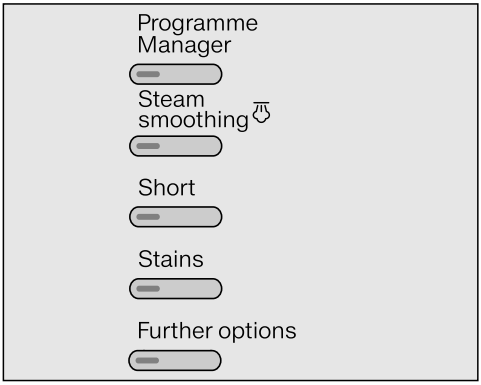

- Press the button for the option you want.

The relevant button will light up.

Not all options are suitable for use with every programme.

You can only select options which are compatible with the programme being used.

ProgrammeManager

The ProgrammeManager option can be used to customise the washing programmes to suit your requirements.

Intensive

For hard-wearing laundry that is very heavily soiled. Cleaning efficiency is increased through more intense mechanical action and the application of more heat energy.

ECO

This option reduces energy consumption whilst maintaining cleaning efficiency. This is achieved by increasing the wash duration and at the same time reducing the wash temperature selected.

Extra gentle

This option decreases mechanical action in order to reduce creasing.

Extra quiet

This option reduces noise levels during the programme. Use this if you want to wash during quiet periods (for instance when children are sleeping). The machine will activate the "Rinse hold" option and not spin. The programme duration is longer.

AllergoWash

This option should be used where high standards of hygiene are required. More energy is used to lengthen temperature holding times and more water is used to increase rinsing efficiency.

Not all ProgrammeManager options are suitable for use with every programme. Please refer to the "Wash programme chart - ProgrammeManager" for a list of suitable programmes.

Steam smoothing

Steam is injected into the drum at the end of the wash process. Reducing the maximum load by 50% will give a better result. For steam smoothing to work properly there needs to be a certain amount of residual moisture still present in the laundry and so the final spin speed is adjusted accordingly.

The garments must be suitable for drying in a tumble dryer and suitable for ironing .

Short

Use this option for light soiling with no visible staining.

The wash duration is reduced.

Stains

In order to clean stained laundry more effectively you can choose from a list of various types of stains. The wash programme will then adapt to the types of stains selected. You can select a maximum of three stains per wash cycle.

Further options

Soak

For heavily soiled and stained items with protein stains.

A duration of between 30 minutes and 5 hours in 30 minute increments can be chosen for the soak process. See "Settings" for more information.

The factory default setting is 30 minutes.

Rinse hold

The laundry is not spun after the final rinse and remains in the final rinse water. This helps prevent creasing if the laundry is not going to be removed from the drum immediately after the end of the programme.

Pre-wash

For laundry with large amounts of dirt, e.g. dust and sand.

Water plus

The water level in the wash and rinse stages is increased.

You can select by how much the water level is increased, see "Settings, Water plus level".

Extra rinse

An additional rinse cycle is carried out to give a better rinse result.

Wash programme chart - ProgrammeManager

ProgrammeManager cannot be selected with programmes which are **not** listed in the chart below.

	Intensive	ECO	Extra gentle	Extra quiet	Allergo-Wash
Cottons	X	X	X	X	X
Minimum iron	X	X	X	X	X
Delicates	X	X	X	X	X
Woollens	–	–	–	X	–
Denim	X	X	X	X	X
Shirts	X	X	X	X	X
Automatic plus	X	X	X	X	X
Dark garments	X	X	X	X	X
Down duvets	X	X	X	–	X
Outerwear	X	X	X	X	X
Proofing	–	–	–	X	–
Separate rinse	–	–	–	X	–
Starch	–	–	–	X	–
Silks	–	–	–	X	–
Sportswear	X	X	X	X	X
Curtains	X	X	X	X	X
First wash	–	–	X	X	–
Pillows	X	X	X	X	X
Express 20	–	–	–	X	–

X = Can be selected

– = Cannot be selected

Wash programme chart - Options

None of the options can be selected with programmes which are **not** listed in the chart below.

	Steam smoothing	Short	Stains
Cottons	X	X	X
Minimum iron	X	X	X
Delicates	X	X	X
Denim	X	X	X
Shirts	X[1)]	X	X
Automatic plus	X	–	X
Freshen up	X[2)]	–	–
Dark garments	X	X	X
Outerwear	–	X	X
Separate rinse	X	–	–
Sportswear	–	X	X
Down filled items	–	–	X
Curtains	X	–	X
Pillows	–	–	X
Mixed items	depending on the items selected		
QuickPower wash	X	–	–
Express 20	X	X[1)]	–
Steam care	X[2)]	–	–

X = Can be selected

– = Cannot be selected

1) = Can be deselected

2) = **Cannot** be deselected

Wash programme chart - Further options

None of the options can be selected with programmes which are **not** listed in the chart below.

	Soak	Water plus	Pre-wash	Extra rinse	Rinse hold
Cottons	X	X	X	X	X
Minimum iron	X	X	X	X	X
Delicates	X	X	X	X	X
Woollens	–	–	–	–	X
Denim	X	X	X	X	X
Shirts	X	X	X	X	X
Automatic plus	X	–	X	–	X
Dark garments	X	X	X	X	X
Down duvets	–	X	X	X	X
Outerwear	X	X	X	X	X
Proofing	–	–	–	–	X
Separate rinse	–	–	–	–	X
Starch	–	–	–	–	X
Silks	–	–	–	–	X
Sportswear	X	X	X	X	X
Down filled items	–	X	X	X	X
Curtains	–	X	X[1)]	X	X
First wash	–	X	–	X	X
Pillows	–	X	X	X	X
Mixed items	depending on the items selected				
QuickPower wash	–	X	–	–	X
Express 20	–	–	–	–	X

X = Can be selected

– = Cannot be selected

1) = Can be deselected

Programme sequence

	Main wash		Rinses		Spinning
	Water level	Wash rhythm	Water level	Rinses	
Cottons		A		2-5[1)2)3)]	✓
Minimum iron		B		2-4[2)3)]	✓
Delicates		C		2-4[2)3)]	✓
Woollens		E		2	✓
Denim		B		2-4[2)3)]	✓
Shirts		C		3-4[3)]	✓
Automatic plus		A B		2-4[2)3)]	✓
Dark garments		B		3-5[2)3)]	✓
Down duvets		C		3-4[3)]	✓
Outerwear		C		3-4[3)]	✓
Proofing	–	B		1	✓
Separate rinse	–	–		2	✓
Starch		B	–	–	✓
Silks		E		2	✓
Sportswear		C		2-3[3)]	✓
Down filled items[4)]		C		3-4[3)]	✓
Curtains		C		3-4[3)]	✓
First wash		B		2-3[3)]	✓
Pillows[4)]		C		3-4[3)]	✓
Drain / Spin	–	–	–	–	✓
Maintenance wash		A		3	✓
Mixed items	depending on the items selected				
QuickPower wash		A		2	✓
Express 20		A		1	✓

= Low water level

= Medium water level

= High water level

Ⓐ = Intensive rhythm

Ⓑ = Normal rhythm

Ⓒ = Sensitive rhythm

Ⓓ = Ultra sensitive rhythm

Ⓔ = Handwash rhythm

✓ = Carried out

– = Not carried out

The washing machine has fully electronic controls with automatic load recognition. It takes in the right amount of water required for the programme depending on the amount of laundry and its absorbency rate.

The programme sequences shown in the chart are based on the standard programme with a full load.

The washing machine programme sequence display shows which stage of the programme has been reached.

Special features in the programme sequence

Anti-crease:
At the end of the programme the drum continues to turn at intervals for up to 30 minutes to help prevent creasing.
Exception: There is no anti-crease phase in the *Woollens* and *Silks* programmes.
The door can be opened at any time during the anti-crease phase.

1) If a temperature of 60 °C or higher is selected, or with 40°C and 60°C temperatures, 2 rinses are carried out. If a temperature of less than 60 °C is selected, 3 rinses are carried out.

2) An additional rinse is carried out if:

– there is too much foam in the drum

– a spin speed lower than 700 rpm has been selected

– the spin speed has been deselected

3) An additional rinse is carried out if:

– *Additional rinse* has been selected.

4) Run-up to spin: A run-up to spin is carried out before the wash process begins to deflate down filled items. Subsequent water intake for the main wash is through compartment II.

Cottons and Minimum iron

PowerWash 2.0, the washing technique developed by Miele, is activated in the *Cottons* programme with small and medium-sized loads and in the *Minimum iron* programme

How it works

Conventional washing techniques wash with more water than the laundry can absorb. This total volume of water needs to be heated.

The PowerWash 2.0 washing technique only uses slightly more water than the laundry can absorb. The water which has not been absorbed by the laundry heats up the drum and the laundry and is sprayed into the laundry over and over again. This reduces the amount of energy used.

Activation

The washing machine calculates the load at the beginning of the wash programme. PowerWash 2.0 is activated if the following conditions are present:

- there is a small to medium-sized laundry load in the *Cottons* programme and in the *Minimum iron* programme.
- the temperature selected must not be more than 60 °C.
- the final spin speed selected must not be lower than 600 rpm.
- CapDosing (💧, ⚠💧)) has not been selected for the main wash.

With some options (e.g. Pre-wash, Water plus) PowerWash 2.0 is not activated.

Special features

- **Drenching phase**
  The washing machine will spin a few times at the beginning of the programme. During spinning, the water discharged is sprayed back into the laundry in order to achieve optimum moisture penetration.

  The optimum water level is set at the end of the drenching phase. If necessary, the washing machine will pump water away or take in a little more fresh water.
- **Noises during the heating phase**
  Unusual bubbling noises can occur while the laundry and the drum are being heated.
- **Use of detergent**
  Make sure you add the correct amount of detergent (for smaller loads).
  For optimum detergent application, use the TwinDos function.

Washing	
The figure quoted in the bucket is the maximum temperature the garment can be washed at. The number of bars under the symbol indicates the level of agitation permitted.	
95	No bar under the symbol: = normal agitation
60	One bar under the symbol: = reduced agitation
30	Two bars under the symbol: = much reduced agitation
	Hand wash (if no temperature is specified, use the lowest temperature or cold)
	Do not wash

Programme selection examples

Programme	Garment care label symbols
Cottons	95 70 60 50 40 30
Minimum iron	95 60 50 40 30
Delicates	40 30
Woollens	
Silks	
Express 20	40 30
Automatic plus	40 30 40 30

Drying	
The number of dots indicates the drying temperature	
	Normal temperature
	Low temperature
	Do not tumble dry

Ironing	
The number of dots indicates the ironing temperature	
	Hot iron (max. sole plate temp. approx. 200 °C)
	Medium hot iron (max. sole plate temp. approx. 150 °C)
	Cool iron (max. sole plate temp. approx. 110 °C). Do not steam iron garments carrying this symbol as this could cause irreversible damage.
	Do not iron

Professional cleaning	
F P	Dry clean only. The letters indicate the type of cleaning agent required.
W	Professional Wet Clean only
	Do not dry clean

Bleaching	
	Any oxidising bleaching agent can be used
	Only use an oxygen based bleach or a non-chlorine bleach
	Do not bleach

Cancelling a programme

You can cancel a programme at any time after it has started:

- Press the *Start/Stop* button.

The following will appear in the display:

- Touch the *OK* sensor.

The suds will be pumped away. The following will appear in the display:

- Pull open the door.
- Remove the laundry.

If you want to select a different programme

- Close the door.
- Select the programme you want.
- Add detergent to the detergent dispenser drawer, if necessary.
- Press the *Start/Stop* button.

The new programme will begin.

Interrupting a programme

- Switch the washing machine off with the ⏻ button.
- Switch the washing machine back on with the ⏻ button to continue with the same programme.

Changing a programme

After the start of a programme it is no longer possible to select a different programme.

Temperature

With the exception of the *Cottons* programme, it is possible to select a different temperature up to 5 minutes after the programme has started.

- Press the *Temperature* button.
- Use the ∨, ∧ and *OK* sensors to change the temperature.

Spin speed

It is possible to change the spin speed up until the final spin begins.

- Press the *Spin speed* button.
- Use the ∨, ∧ and *OK* sensors to change the spin speed.

Options

It is possible to select or deselect the *Short* and *Water plus* options up to 5 minutes after the programme has started.

Tip: It is not possible to make any changes to the programme or to cancel it if the safety lock has been activated.

Adding or removing laundry after the programme has started

■ Press the *Start/Stop* button.

The following will appear in the display:

■ Scroll up the list with the ∨ or ∧ sensor to:

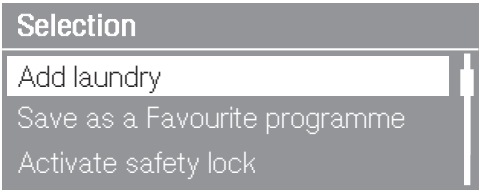

■ Touch the *OK* sensor.

If this message does not appear in the display then it is no longer possible to add or remove items of laundry.

The programme will stop and the door will unlock.

■ Pull open the door.

■ Add or remove items.

■ Close the door.

■ Press the *Start/Stop* button.

The programme will continue.

Please note:

Once a programme has started the washing machine cannot recognise any adjustment to the load.

For this reason, if laundry is added or removed after the start of a programme, the machine will always complete the programme cycle assuming a full load

The door cannot be opened, if:

– the suds temperature is above **55 °C**.

– the water is above a certain level.

– the programme has reached the *Spin* stage.

If you want to open the door when the above conditions are present you will need to cancel the programme.

The safety lock will remain activated if the temperature in the drum is above 55 °C. The lock will not deactivate until the temperature has dropped to below 55 °C.

Safety lock

The safety lock prevents the temperature, spin speed or options being altered during a wash programme.

To activate the safety lock

■ Press the *Start*/*Stop* button.

The following will appear in the display:

■ Scroll up the list with the ∨ or ∧ sensor to:

■ Touch the *OK* sensor.

The following will appear in the display:
ℹ Locked

The safety lock is now activated.

To deactivate the safety lock

■ Press the *Start*/*Stop* button.

The following will appear in the display:

■ Use the ∨ sensor to scroll through the list to Deactivate safety lock and confirm your entry with the *OK* sensor.

The following will appear in the display:
ℹ Unlocked

The safety lock is now deactivated.

The correct detergent

All detergents produced for automatic washing machines are suitable. Follow the manufacturer's instructions and dosage recommendations on the packaging.

For users in Asia:
please use a low foaming detergent suitable for use in front-loading machines

The right amount to dispense will depend on the following:

- the soiling level of the load
- the quantity of the laundry
- the water hardness level.
  Check with your local water supplier if you do not know the hardness level in your area.

Water softeners

A water softener can be used to cut down on the use of detergents in areas with water hardness levels II and III. Dispense according to the amount specified on the packaging. First add detergent and then the water softener.

You can then use the recommended amount of detergent for water hardness level I.

Water hardness levels

Hardness scale	Hardness level in mmol/l	German scale °d
I (soft)	0 – 1.5	0 – 8.4
II (medium)	1.5 – 2.5	8.4 – 14
III (hard)	above 2.5	above 14

Dispensing aids

Use dispensing aids, (e.g. balls) if these are supplied with the detergent, particularly when using liquid detergent.

Refill packs of detergent

When purchasing detergent buy refill packs wherever possible. This helps reduce the amount of waste packaging.

Fabric conditioner and liquid starch

Fabric conditioner
makes garments soft to handle and helps prevent static cling when tumble drying.

Starch
stiffens and gives body to items of laundry, e.g. shirts, tablecloths and bed linen.

Miele recommended detergents

Miele detergents and care products have been specially designed for Miele washing machines. They are available to order via the internet at www.miele-shop.com or from Miele.

	Miele UltraPhase 1 / 2	Miele Cap	Miele Cap	Miele Cap
Cottons	✓	–	F	H
Minimum iron	✓	–	F	H
Delicates	✓	A, B, C	F	–
Woollens	–	D, E	–	–
Denim	✓	–	F	–
Shirts	✓	–	F	H
Automatic plus	✓	–	F	H
Dark garments	✓	–	F	–
Down duvets	–	B	–	–
Outerwear	–	C	–	–
Proofing	–	–	G	–
Separate rinse	–	–	F	–
Silks	–	E	–	–
Sportswear	–	A	–	–
Down filled items	–	B	–	–
Curtains	✓	–	–	H
First wash	✓	–	F	–
Pillows	✓	–	–	–
Mixed items	✓	–	F	–
QuickPower wash	✓	–	–	–
Express 20	✓	–	F	–

✓ Recommended
– Not recommended

A Sport
B Down
C Outdoor
D WoolCare

E SilkCare
F Fabric conditioner
G Reproofing
H Booster

Recommended detergents in accordance with Directive (EU) Nr. 1015/2010

The recommendations apply to the temperature ranges given in the Programme chart.

	Universal	Coloureds	Delicates and woollens	Specialist
	detergent			
Cottons	✓	✓	–	–
Minimum iron	–	✓	–	–
Delicates	–	–	✓	–
Woollens	–	–	✓	✓
Denim	–	✓[1]	–	✓
Shirts	✓	✓	–	–
Automatic plus	–	✓	–	–
Dark garments	–	✓[1]	–	✓
Down duvets	–	–	✓	✓
Outerwear	–	–	✓	✓
Silks	–	–	✓	✓
Sportswear	–	–	✓	✓
Down filled items	–	–	✓[1]	✓
Curtains	✓[2]	–	–	✓
First wash	–	✓	–	–
Pillows	–	–	✓[1]	✓
Maintenance wash	✓[2]	–	–	✓
Mixed items	depending on the items selected - observe the information in the display			
QuickPower wash	✓	✓	–	–
Express 20	–	✓[1]	–	–

✓ Recommended

– Not recommended

[1] Liquid detergent

[2] Powder detergent

Fabric conditioner and liquid starch at the end of the programme

You can dispense fabric conditioner either by using automatic dispensing or via the detergent dispenser compartment.

Automatic dispensing

One of the automatic dispensing containers must be filled with fabric conditioner.

- Touch the *Dos* sensor.
- Activate the appropriate container.

Fabric conditioner will be dispensed in the last rinse.

Manual dispensing

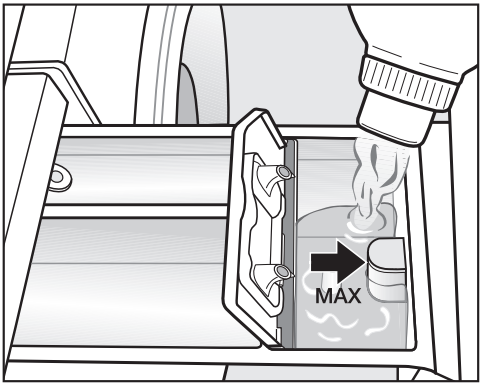

- Add the fabric conditioner or liquid starch to the compartment or insert the appropriate capsule. **Do not exceed the maximum level mark.**

The agent will be automatically dispensed in the last rinse. At the end of the programme a small amount of water will remain in the compartment.

If starching frequently, thoroughly clean the dispenser compartment, especially the siphon tube regularly.

Colour run and dye removers/dyes

⚠ Colour run and dye removers can cause corrosion in the washing machine.
Do not use colour run or dye removers in this washing machine.

Dyes suitable for use in domestic washing machines can be used. However, please note that the salt used in the dyeing process can cause corrosion to stainless steel components in the machine if you dye frequently. Always observe the manufacturer's instructions carefully.

⚠ When using the washing machine to dye fabric it is essential to select the *Water plus* option.

Adding fabric conditioner separately

- Add fabric conditioner to the ❀ compartment or insert the appropriate capsule.
- Select the *Separate rinse* programme.
- Change the spin speed if necessary.
- Activate the *Cap* ⌂ sensor if using a capsule.
- Press the *Start*/*Stop* button.

Adding starch separately

- Add liquid starch to the ❀ compartment and powder or viscous starch to the ⊔ compartment.
- Select the *Starch* programme.
- Change the spin speed if necessary.
- Activate the *Cap* ⌂ sensor if using a capsule.
- Press the *Start*/*Stop* button.

Cleaning the drum (Hygiene info)

Washing at low temperatures and/or using liquid detergent can cause bacteria and unpleasant odours to build up in the washing machine. Use the *Maintenance wash* programme to clean the machine. Run this programme regularly or at the latest when Hygiene info: Run a programme with a minimum temperature of 75°C. appears in the display.

External casing and fascia panel

⚠ Disconnect the machine from the mains electricity supply before cleaning or maintenance.

⚠ The washing machine must not be hosed down.

- Clean the casing and fascia panel with a mild non-abrasive cleaning agent or soap and water using a well wrung-out cloth. Wipe dry with a soft cloth.
- The drum can be cleaned with a proprietary stainless steel cleaning agent, following the manufacturer's instructions on the packaging.

⚠ Do not use solvents, abrasive cleaners, glass cleaners or multi-purpose cleaning agents. These could damage plastic surfaces and other parts.

Cleaning the detergent dispenser drawer

Washing at low temperatures and the use of liquid detergent can lead to a build-up of mould and bacteria in the detergent dispenser drawer.

- Clean the entire drawer at regular intervals for hygiene reasons, even if you are using the TwinDos system exclusively.

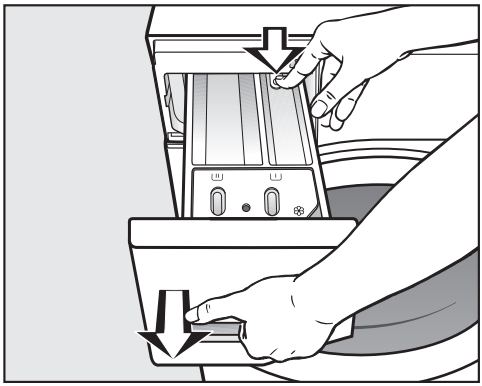

- Pull out the detergent dispenser drawer until a resistance is felt. Press down the release button and at the same time pull the drawer right out of the machine.
- Clean the drawer with hot water.

Cleaning the siphon tube and the channel

Liquid starch can cause the siphon to become clogged. Make sure that you clean the siphon and siphon tube particularly thoroughly after using liquid starch a few times.

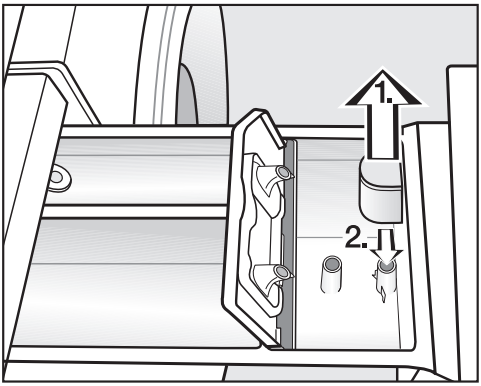

■ Clean the siphon.

1. Remove the siphon from the ❀ compartment and rinse under hot running water. Clean the siphon tube at the same time.
2. Replace the siphon.

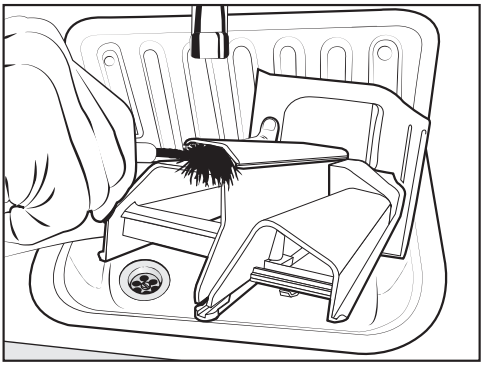

■ Clean the fabric conditioner channel with a brush and hot water.

Cleaning the detergent dispenser drawer housing

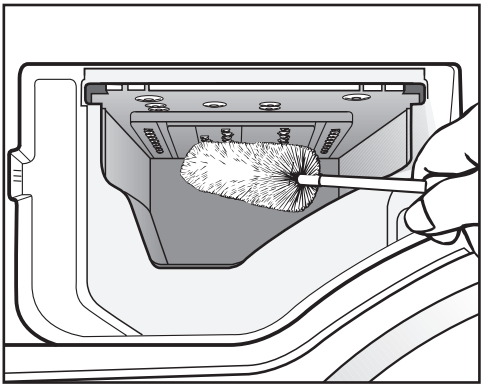

■ Use a bottle brush to remove detergent residues and limescale from the jets inside the detergent dispenser drawer housing.

■ Replace the detergent dispenser drawer.

Tip: Leave the detergent dispenser drawer slightly open to allow it to dry.

Cleaning the TwinDos system

⚠ If the system has not been used for a long time (more than two months) the detergent in the hoses can become viscous.

The hoses could become blocked and would then need to be cleaned by a service technician.

Clean the TwinDos system every time you change brand of liquid detergent or fabric conditioner or if the system has not been used for a long period of time.

The washing machine has a cleaning programme for cleaning the TwinDos system containers and the hoses inside the washing machine.

The TwinDos containers (optional accessory) are required to carry out cleaning.

Starting the maintenance programme

- Switch on the washing machine and wait until the standard display lights up.
- Touch the ∨ and ∧ sensors at the same time until the following appears in the display:

The Settings menu is activated.

- Touch the ∨ sensor to select the TwinDos option and activate this with the *OK* sensor.
- Touch the ∨ sensor to select the Maintenance option and activate this with the *OK* sensor.

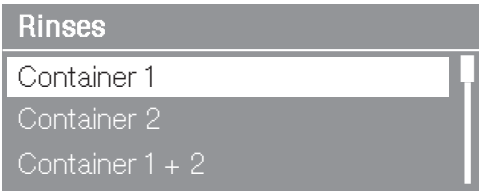

- Touch the ∨ or ∧ sensor until the container (or containers) you want appears in the display and confirm this with the *OK* sensor.
- Touch the ∨ sensor to select the Start rinse option and confirm this with the *OK* sensor.

The following will appear in the display:
ℹ Fill containers 1 + 2 to the line with water and replace

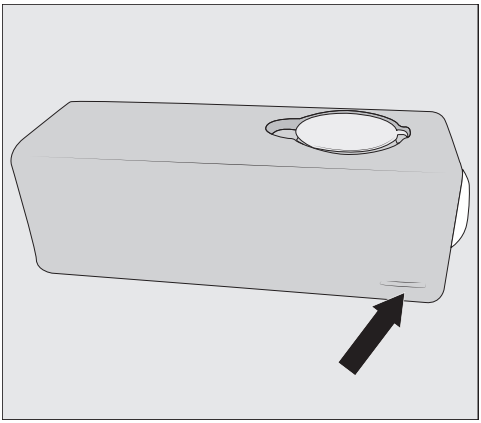

- Fill one or both of the TwinDos containers up to the mark with water and push it/them into the compartment.

The following will appear in the display:
ℹ Please close the door and press Start

- Close the door and press the flashing *Start*/*Stop* button.

Cleaning will start.

After cleaning you can fill one or both containers with new liquid detergent and/or fabric conditioner.

Cleaning the compartments

Detergent residue can cause clogging.

- Use a damp cloth to clean the compartment interior when you change the cartridge or container.

Cleaning the water inlet filter

The washing machine has a filter to protect the water inlet valve. The accessible filter in the union at the open end of the inlet hose should be checked every six months or so, or more often if there are frequent interruptions to the water supply.

- First turn off the stopcock.
- Unscrew the inlet hose from the stopcock.

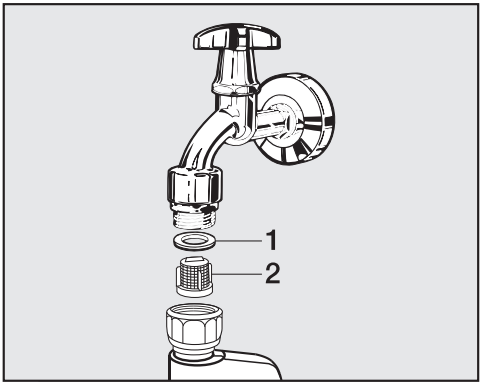

- Remove the rubber seal **1** from the recess.
- Using pointed pliers, take hold of the plastic filter bar **2** and remove it. Clean the plastic filter.
- Put the filter and seal back in the reverse order and reconnect the hose.

Turn on the stopcock and check the connection is watertight. If water drips out, tighten the connection.

The filter **must** be put back in place after cleaning.

Minor faults in the performance of the washing machine, some of which may result from incorrect operation, can be put right without contacting the Service Department.

The following guide may help you to find the reason for a fault, and to correct it. You should, however, note the following:

⚠ Repair work to electrical appliances should only be carried out by a suitably qualified person in strict accordance with current local and national safety regulations. Repairs and other work by unqualified persons could be dangerous. The manufacturer cannot be held liable for unauthorised work.

The programme does not start

Problem	Cause and remedy
The display remains dark, and the Start/Stop button indicator light does not come on.	There is no power to the machine. ■ Check whether the mains plug is plugged in and switched on. ■ Check whether the fuse or circuit breaker has tripped.
	The washing machine has switched off automatically to save energy. ■ Switch it back on with the ⏻ button.
The display prompts you to enter a code.	Access via a code has been activated. ■ Enter the code and confirm the entry. Deactivate the code if you do not wish this message to appear in the display the next time the machine is switched on.
The following appears in the display: ⚠ Door lock The door will not lock. Call Service.	The door is not closed properly. The door lock could not engage. ■ Close the door again. ■ Start the programme again. If the fault message appears again, contact the Service Department.

The following fault messages appear in the display and the programme stops

Problem	Cause and remedy
Drainage fault Clean the drain filter and the pump. Check the drain hose.	The water outlet is blocked or restricted. The drain hose has been fixed too high. ■ Clean the drain filters and the drain pump. ■ The maximum delivery head is 1 m.
Water intake fault Open the stopcock	The water inlet is blocked or restricted. ■ Check whether the stopcock is opened properly. ■ Check whether the inlet hose is kinked. ■ Check whether the water pressure is too low.
	The filter in the water inlet is blocked. ■ Clean the filter.
Technical fault F If restart is unsuccessful call Service.	There is a fault. ■ Disconnect the washing machine from the mains electricity supply, either by switching off at the wall socket and withdrawing the plug, or by disconnecting the relevant fuse on the mains fuse board. ■ Wait **at least 2 minutes**, before reconnecting the washing machine to the mains electricity supply. ■ Then switch the washing machine on again. ■ Restart the programme. If the fault message appears again, contact the Service Department.
Waterproof system reacted Close the stopcock. Call Service.	The water protection system has reacted. ■ Close the stopcock. ■ Call the Service Department.

To switch off the fault messages: Switch the washing machine off with the ⏻ button.

A message appears in the display at the end of the programme

Message	Cause and remedy
ℹ Intensive flow: Clean the filter and jets or remove foreign objects from the pump housing.	The pumps are dirty. ■ Clean the pumps as described in "Problem solving guide - Opening the door in the event of a blocked drain outlet and/or power failure" ■ Start the programme again after cleaning the pumps.
	The jet in the top of the door ring is blocked with fluff. ■ Remove the fluff with your finger. Do not use any sharp or pointed tools to do this. ■ Start the programme again after cleaning the jet.
	If the fault message appears again, contact the Service Department. The washing machine can still be used but with reduced functionality.
ℹ Align the washing machine	The smoothing process which the laundry undergoes at the end of the programme could not be carried out properly. ■ Check whether the washing machine is aligned correctly as described in "Installation and connection - Levelling the machine". ■ Check whether the maximum delivery height of 1 m has been exceeded.
	If the fault message appears again, contact the Service Department. The washing machine can still be used but with reduced functionality.

The messages will appear at the end of the programme and when the washing machine is switched on and need to be confirmed with the *OK* sensor.

A message appears in the display at the end of the programme

Message	Cause and remedy
ℹ Check dosage	Excessive foam has built up during washing. ■ Check the amount of detergent dispensed. ■ With automatic detergent dispensing check the dosage amount set. ■ Observe the instructions on the detergent packaging and the degree of soiling of the laundry. ■ If necessary, reduce the dosage amount by increments of 10%.
ℹ Hygiene info: Run a programme with a minimum temperature of 75°C.	A programme using a temperature above 60 °C has not been run for a long time. ■ In order to prevent bacteria and unpleasant odours building up in the machine, run the *Maintenance wash* programme using Miele machine cleaner or powder detergent.
ℹ Very few wash cycles can now be run. Please order a new cartridge for compartment 1.	The detergent in the cartridges is running low. There are between 4 and 8 wash cycles remaining. ■ Order new cartridges.
ℹ Insert a new cartridge or fill container 1 **or** Insert a new cartridge or fill container 2. Monitor wash results.	The TwinDos container (or containers) is empty. ■ Fill the container or containers with liquid detergent or fabric conditioner or replace the cartridge(s). ■ Check if the laundry is clean. There may not have been enough detergent. If necessary, wash the items again.

The messages will appear at the end of the programme and when the washing machine is switched on and need to be confirmed with the *OK* sensor.

Problems with TwinDos

Problem	Cause and remedy
No detergent and/or fabric conditioner was dispensed.	Automatic dispensing has not been activated. ■ Touch the *Dos* sensor before running the next programme. Automatic dispensing will be activated.
	No detergent/fabric conditioner was dispensed even though automatic dispensing was activated. ■ Try again. ■ If detergent is still not dispensed, call the Service Department.
There are dark specks in the liquid detergent.	Mould has developed in the detergent. ■ Pour the liquid detergent out of the container and then clean the container thoroughly.

General problems with the washing machine

Problem	Cause and remedy
The machine shakes during the spin cycle.	The machine feet are not level. ■ Level the machine and adjust the feet correctly.
The laundry has not been spun properly and is still wet.	The machine detected an imbalance during the final spin cycle and reduced the spin speed automatically. ■ Include both large and small items in the load as this will give better distribution during spinning.
Strange pump noises can be heard.	This is not a fault. These slurping noises occur at the end of the pump sequence as a normal part of operation.
Large amounts of detergent residue remain in the detergent dispenser drawer.	The water pressure is too low. ■ Clean the water inlet filter. ■ It may be useful to select the *Water plus* option.
	Powder detergent used in conjunction with water softeners tends to become sticky. ■ In future, add washing powder into the dispenser drawer first, and then add the water softener.
Fabric conditioner is not completely dispensed or too much water remains in the ❀ compartment.	The siphon tube is not correctly positioned or is clogged. ■ Clean the siphon, see "Cleaning and care - Cleaning the detergent dispenser drawer".

General problems with the washing machine

Problem	Cause and remedy
At the end of the programme there is still liquid in the capsule.	The small pipe in the detergent dispenser drawer onto which the capsule is placed is blocked. ■ Clean the small pipe.
	This is not a fault. For technical reasons a small amount of water will remain in the capsule.
There is water next to the capsule in the fabric conditioner compartment.	The *Cap* ⌂ sensor was not activated or an empty capsule was not removed at the end of the last programme. ■ Make sure that you remember to activate the *Cap* ⌂ sensor the next time you insert a capsule. ■ Remove and then dispose of the empty capsule at the end of each programme.
	The small pipe in the detergent dispenser drawer onto which the capsule is placed is blocked. ■ Clean the small pipe.
The display is in a different language.	A different language has been selected in "Settings, Language ⚑". ■ Set the language you want. The flag symbol will guide you.
The display is dark.	The display has switched off automatically to save energy (Standby mode). ■ Press a button. Standby comes to an end.
Steam comes out of the detergent dispenser drawer while steam is being generated.	This is not a fault. Steam may emerge from the detergent dispenser drawer, depending on the amount of laundry and the ambient temperature.
Noises while steam is being generated.	This is not a fault. These noises occur when steam is being generated and when steam is being injected into the drum.

An unsatisfactory wash result

Problem	Cause and remedy
Liquid detergent does not give the required result.	Liquid detergents usually contain no bleaching agents. They do not remove fruit, coffee and tea stains. ■ Use the Miele 2 Phase System. The targeted addition of UltraPhase 2 during the wash process removes stains effectively. ■ Use a general purpose powder detergent containing a bleaching agent.
Grey, greasy particles cling to washed laundry.	Insufficient amounts of detergent were used to break down the particles of grease in heavily soiled laundry. ■ Use more detergent. ■ Before washing the next load, run the *Maintenance wash* using Miele machine cleaner or a powder detergent.
White residues which look like powder detergent are seen on dark textiles after washing.	The detergent contained compounds (zeolites) to aid water softening which are not soluble in water. These have ended up on the laundry. ■ Try and brush off the residues with a soft brush once the laundry is dry. ■ Wash dark textiles using a detergent which contains no zeolites. Liquid detergents usually contain no zeolites. ■ Use the *Dark garments* programme.

The door will not open

Problem	Cause and remedy
The door cannot be pulled open during a programme.	The drum is locked during a programme. ■ Press the *Start/Stop* button. ■ Use the ∨ sensor to select *Cancel programme* or *Add laundry*. The door will unlock and you will be able to pull it open.
	There is still water in the drum and the machine is unable to drain. ■ Clean the drain filter and the drain pump as described in "Opening the door in the event of a blocked drain outlet and/or power failure".
	The water level in the drum is too high. ■ Cancel the programme. The water will be pumped away.
Comfort cooling **appears in the display after a programme has been cancelled.**	For safety reasons the drum door cannot be opened if the suds temperature is higher than 55 °C. ■ Wait until the temperature in the drum has decreased and the message has gone out in the display.
The door will not open after the *Steam care* or *Freshen up* programme has finished.	The *Steam care* or *Freshen up* programme has been started several times one after the other. The steam has caused the temperature in the drum to rise above 55°C and the door is locked to prevent the risk of burning. ■ Wait a few minutes until the temperature in the drum has decreased.
The following appears in the display: ⚠ Door release Door release	The door lock has jammed. ■ Call the Service Department.

Opening the door in the event of a blocked drain outlet and/ or power failure

■ Switch off the washing machine.

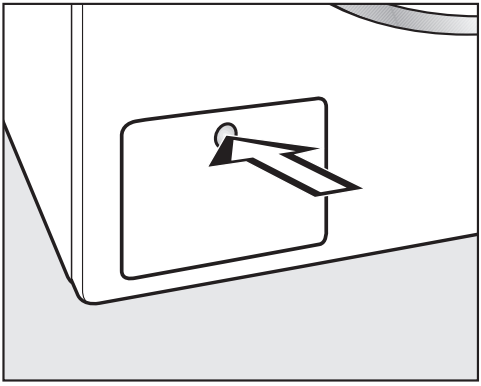

■ Press the drain pump access panel.

The panel will spring open.

Blocked drain outlet

If the drain outlet is blocked, a large quantity of water can remain in the washing machine.

⚠ If laundry has been washed at a high temperature, water draining out of the machine will still be hot. Danger of scalding!

Take care when draining the machine.

Procedure for draining the washing machine

When draining water from the machine, do not unscrew the drain filters completely or take them right out.

■ Place a suitable container, e.g. a Miele universal oven tray under the access panel.

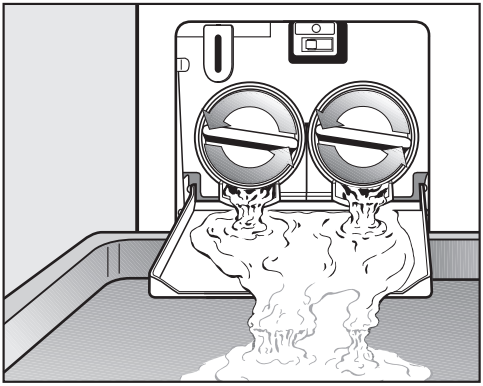

■ Slowly and carefully unscrew the filters to let the water out. Be careful not to release too much water at once. If the flow of water is too strong, some water can seep into the washing machine base and activate the water protection float switch. This will prevent the washing machine from functioning.

■ Tighten the drain filters back up again if you need to interrupt the flow of water.

Once the flow of water ceases:

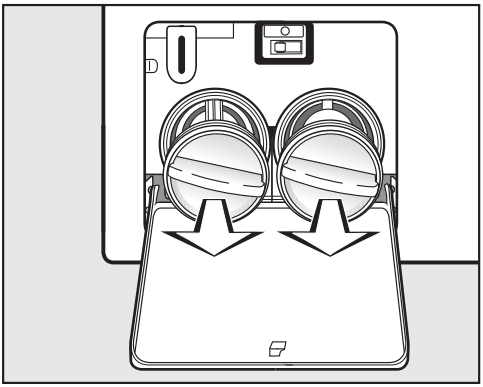

■ Remove the drain filters completely.

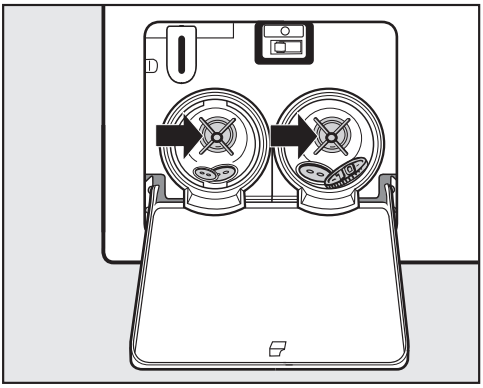

■ Clean them thoroughly.

■ Remove any foreign objects (e.g. buttons, coins, etc.) and fluff from the filter housing. Turn the impellers by hand to check that they rotate freely.

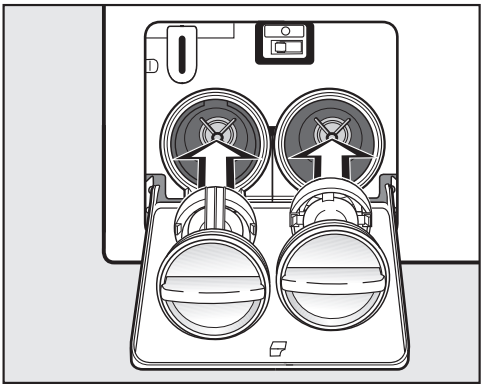

■ Replace the drain filters correctly (on the right and left) and tighten them securely.

⚠ Water leaking from the washing machine can cause damage.
Replace and tighten the drain filters securely.

Opening the door

⚠ Always make sure that the drum is stationary before reaching in to remove laundry. Reaching into a moving drum is extremely dangerous.

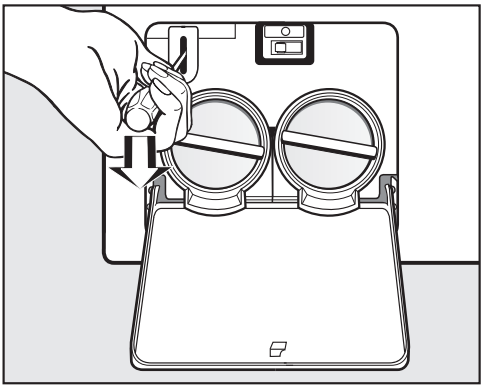

■ Use a screwdriver to unlock the door.

■ Pull open the door.

Repairs

In the event of any faults which you cannot remedy yourself, please contact:

- your Miele Dealer, or
- Miele (Contact details for Miele are given at the end of this booklet).

When contacting your Dealer or Miele, please quote the model and serial number of your machine, both of which are shown on the data plate visible above the porthole glass when the door is open.

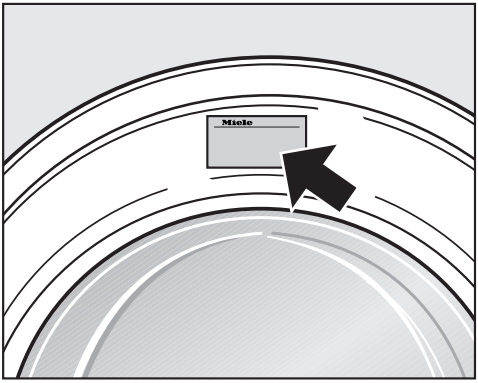

N.B. A call-out charge will be applied for service visits where the problem could have been resolved as described in these instructions.

Guarantee: U.K.

In the U.K, the washing machine is guaranteed for 2 years from the date of purchase.

In the U.K. you must activate your cover by calling 0330 160 6640 or registering online at www.miele.co.uk.

Guarantee: Other countries

For information on the appliance guarantee specific to your country please contact Miele. See end of this booklet for contact details.

Optional accessories

Optional spare parts and accessories for this washing machine are available from your Miele Dealer, the Miele Spare Parts Department or via the internet at www.miele-shop.com.

Please note that telephone calls may be monitored and recorded for training purposes.

Front view

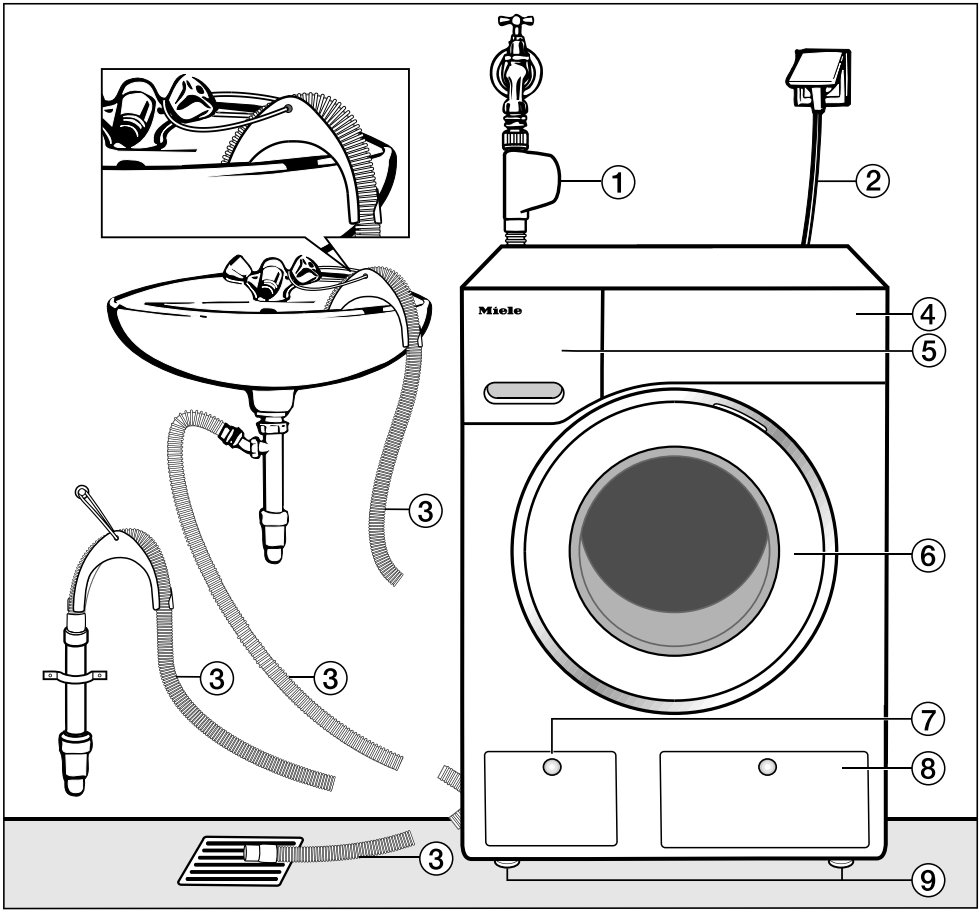

① Inlet hose with Waterproof system

② Electrical supply cable

③ Flexible drain hose (with detachable swivel elbow)

④ Control panel

⑤ Detergent dispenser drawer

⑥ Door

⑦ Access to drain filter, drain pump and emergency release

⑧ Access panel for TwinDos containers

⑨ Four height adjustable feet

Rear view

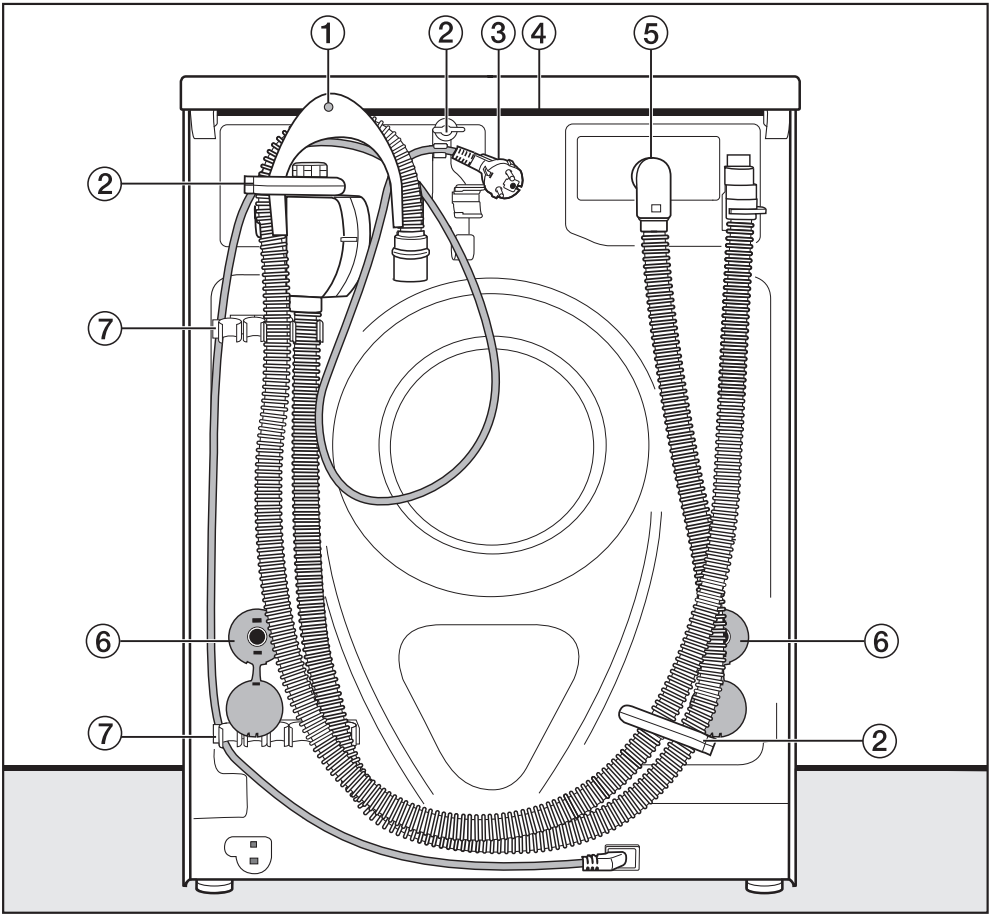

① Drain hose

② Transport clips for electrical supply cable, inlet and drain hoses

③ Electrical supply cable

④ Protruding lid for holding when moving the machine

⑤ Inlet hose with Waterproof system

⑥ Safety caps for transit bars

⑦ Transport clips for inlet and drain hoses and for storing transit bars when not in use

Installation surface

A concrete floor is the most suitable installation surface for a washing machine, being far less prone to vibration during the spin cycle than wooden floorboards or a carpeted surface.

Please note:

- The machine must be level and securely positioned.
- To avoid vibrations during spinning, the machine should not be installed on soft floor coverings.

If installing on a wooden joist floor:

- We recommend a plywood base at least 59 x 52 x 3 cm). The base should span several joists and be bolted to the joist and not only the floorboards. Check for the presence of pipes and cables first.

Tip: If possible, install the machine in a corner, as this is usually the most stable part of the floor.

⚠ There is the danger of the washing machine moving about during spinning and falling off a plinth.
For this reason, if the machine is installed on a raised plinth (concrete or brick), it has to be secured against slippage using an MTS floor/plinth mounting kit (available from Miele).

Transporting the washing machine to its installation site

To manoeuvre the washing machine out of its packing case to its installation site, hold it by the front feet as well as by the edge of the lid where it protrudes to the rear of the machine.

⚠ Ensure that the machine feet and the floor are dry to prevent the machine from slipping during the spin cycle.

Removing the transit bars

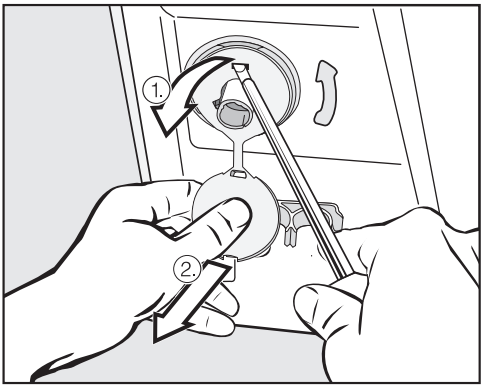

- To remove the left and right covers

1. Pull on the attached stopper,
2. then use a screwdriver to release the catches at the top and bottom.

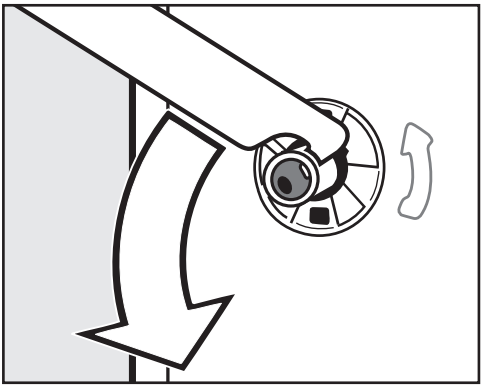

■ Using the spanner supplied, turn the left-hand transit bar 90°, then

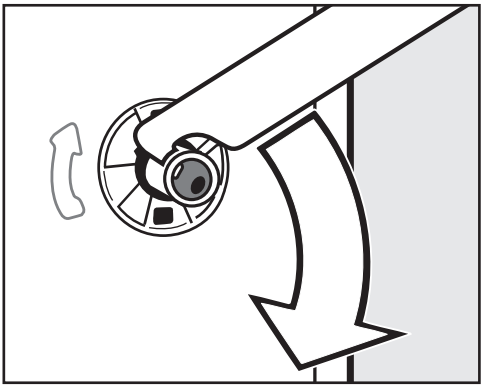

■ Turn the right-hand transit bar 90°, then

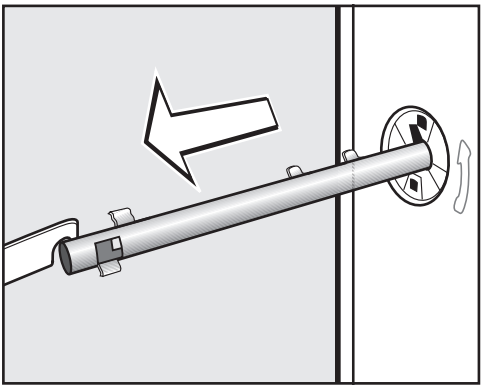

■ pull the transit bar out.

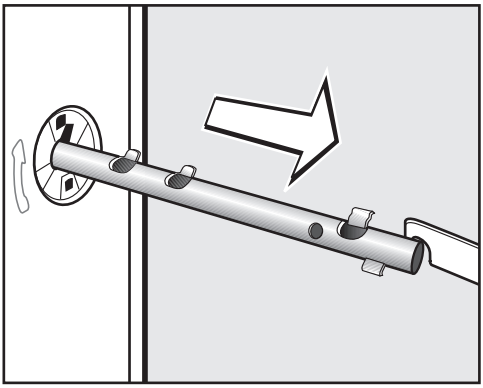

■ pull the transit bar out.

⚠ To avoid the risk of injury, the holes for the transit bars must be covered after the transit bars have been removed.

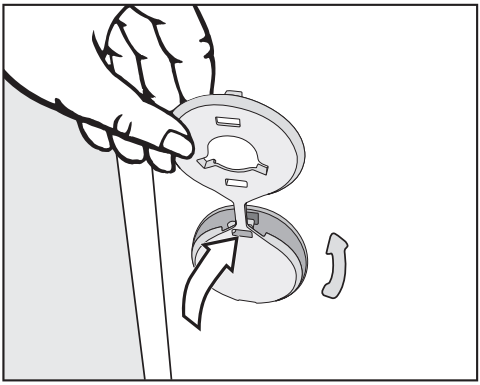

■ Plug the holes with the plastic caps as illustrated.

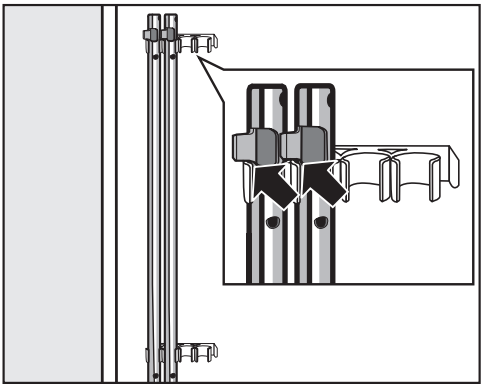

■ Secure the transit bars to the back of the washing machine. Make sure the top catch is located above the holder.

⚠ The washing machine must not be moved without the transit bars in place. Store them as shown or keep them in a safe place for future use. They must be re-fitted if the machine is to be moved again (e.g. when moving house).

Re-fitting the transit bars

Re-fitting is carried out by reversing the procedure.

Levelling the machine

The washing machine must stand perfectly level on all four feet to ensure safe and proper operation.

Incorrect installation may increase electricity and water consumption and may cause the machine to move about.

Screwing out and adjusting the feet

The four adjustable screw feet are used to level the machine. All four feet are screwed in when the machine is delivered.

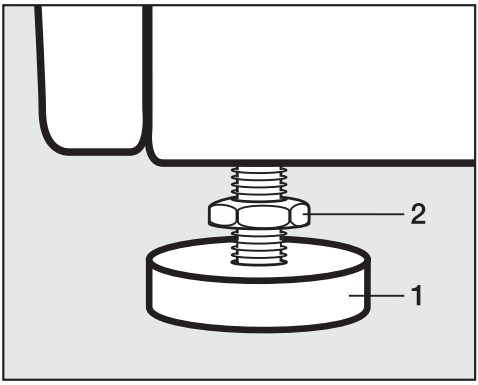

- Using the spanner supplied turn counter nut **2** in a clockwise direction. Then turn counter nut **2** together with foot **1** to unscrew.

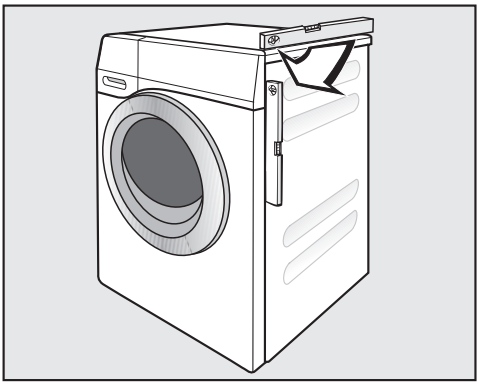

- Use a spirit level to check that the washing machine is standing level.
- Hold foot **1** securely with a pipe wrench. Turn counter nut **2** again using the spanner supplied until it sits firmly up against the housing.

⚠ All four counternuts must be firmly up against the housing. Please also check this for the feet which did not need adjustment. Otherwise there is a danger of the machine moving about.

Building under a continuous worktop/ in a kitchen run

⚠ The washing machine lid cannot be removed.

This washing machine (with lid intact) can be pushed under a worktop if there is space to do so.

Washer-dryer stack

The washing machine can be combined with a Miele tumble dryer in a washer-dryer stack. The appropriate "WTV" stacking kit* to match your dryer is required.

All parts marked* are available from your Dealer or Miele.

Please note:

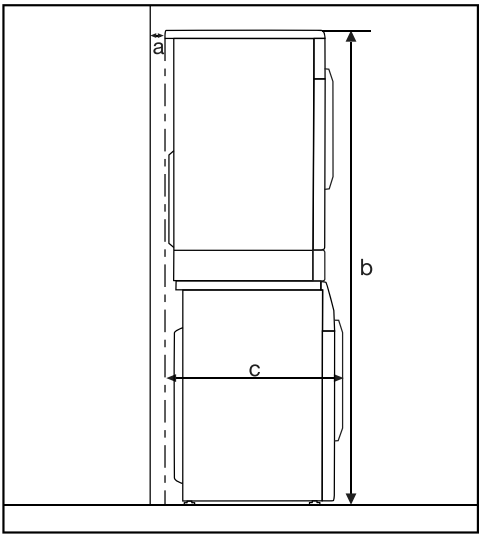

a = at least 2 cm

b = WTV without drawer: 172 cm
WTV with drawer: 181 cm

c = 68 cm

The water protection system

The Miele water protection system protects all parts of the washing machine from water damage.

The system consists of three main components:

- the inlet hose
- the electronic unit and drainage and overflow protection
- the drain hose

The Waterproof System (WPS)

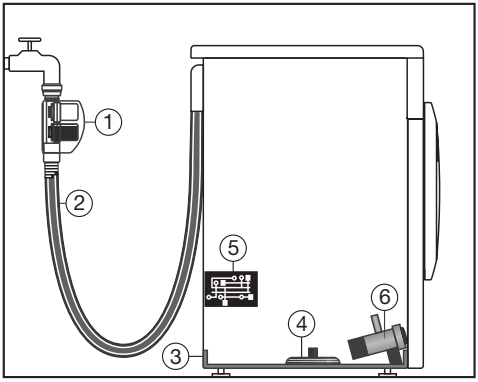

① Two solenoid valves

② Double-skinned inlet hose

③ Sump

④ Float switch

⑤ Electronic unit

⑥ Drain pump

Inlet hose

- The casing on the inlet hose contains two solenoid valves ①, which cut off the water intake directly at the stopcock. These valves provide two-fold protection. In the event that one of the valves is faulty, the other valve will cut off the water intake.
  Blocking the water intake at the stopcock means that the inlet hose is only under pressure whilst water is being taken into the machine. For the remainder of the time, pressure on the inlet hose is negligible.
- Protection against the solenoid valves bursting
  The solenoid valves are pressure tested to between 7,000 kPa and 10,000 kPa against bursting.
- The double-skinned inlet hose ② has a pressure-resistant inner hose and a protective sleeve. Any leaking water is fed into the sump ③ through this protective sleeve. A float switch ④ closes the solenoid valves, preventing any more water flowing into the machine and water in the suds container is pumped away.

The electronic unit ⑤ and drainage and overflow protection

– Drainage protection
  Any leaking water is collected in the sump ③ in the base of the machine. A float switch ④ closes the solenoid valves ①, preventing any more water from flowing into the machine and water in the suds container is pumped away.

– Overflow protection
  If the water level exceeds a certain level, the drain pump ⑥ switches in and pumps the excess water away in a controlled manner.
  Should the water level rise repeatedly in an uncontrolled way, the drain pump ⑥ will switch on continuously, the washing machine will indicate that there is a fault and a tone will sound.

Drain hose

The drain hose is protected by a ventilation system which prevents the washing machine from being emptied completely.

Connection to the water supply

⚠ The casing on the water inlet hose contains electrical components. It must not be connected in areas where there is the risk of water or other liquids reaching it, e.g. bathrooms.

The casing on the water inlet hose must not get wet.

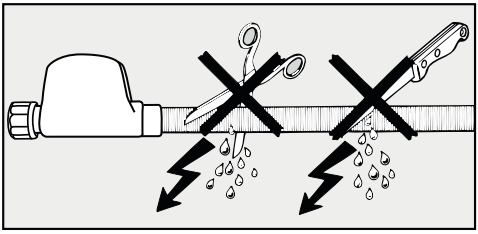

The protective sleeve of the hose must not be damaged or kinked.

The washing machine should be connected to a mains water supply in accordance with current local and national safety regulations. The German authorities do not require it to have a non-return valve as the washing machine has been designed to comply with DIN regulations.

The machine is designed to operate with a flow pressure of between 100 and 1,000 kPa. If it is higher than 1,000 kPa it is essential to fit a pressure reducing valve.

Connection to the mains water supply should incorporate a mains stopcock with a ¾" threaded union. The stopcock should be fitted by a qualified plumber.

⚠ The connection point is subject to mains water pressure. Turn on the stopcock slowly and check for leaks. Correct the position of the washer and union if appropriate.

The washing machine is **not** suitable for connection to a hot water supply.

Maintenance

Only use a **Miele Waterproof system** hose should you need a replacement. Disconnect the machine from the electricity supply before unscrewing the waterproof system inlet hose from the stopcock.

In order to protect the water inlet valve, the dirt filter in the water inlet valve connection must not be removed.

Extension hose

A 1.5 metre long (metal) extension hose is available from your Miele dealer or the Miele Spare Parts Department as an optional extra.This hose is tested to withstand pressures of up to 14,000 kPa and can be used as a flexible extension to the water supply. N.B. Using this hose will render the Water system safety valve on the inlet hose ineffective.

Connection to the drainage system

The machine drains via a drain pump with a delivery head of 1 metre*. The drain hose must not be kinked as this restricts drainage. The swivel elbow at the end of the hose can be turned in either direction, or can be detached if required, with a sharp twist and pull.
If required, the drain hose can be extended to a length of 5 m. The necessary parts can be purchased from your Miele Dealer or Miele.

* For a delivery head of more than 1 m (up to a max. of 1.8 m) a replacement drain pump will need to be fitted. Please contact Miele or your Miele Dealer for advice. If necessary, the drain hose can be extended to a length of 2.5 m. The necessary parts can be purchased from your Miele Dealer or Miele.

Drain hose connection:

1. Direct into a sink or basin.

   Please note the following:

   – Hook the hose over the edge and secure.

   – Make sure that the water can drain away freely without hindrance. Otherwise there is a risk of water overflowing or of some of the drained water being sucked back into the machine.

2. Connected securely to a plastic drain pipe with a rubber nipple. There is no need to use a non-return valve.

3. Connected securely to a floor gully.

4. Connected securely to a standpipe.

Please note:

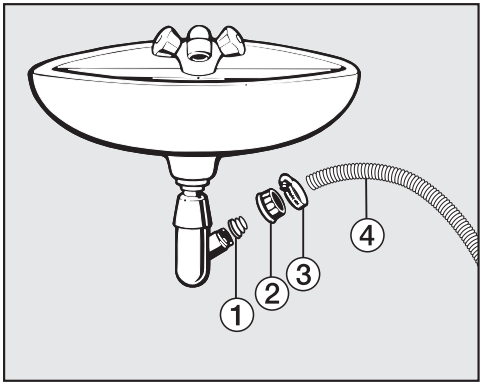

① Adapter

② Nut

③ Hose clip

④ End of the hose

- Fit adapter ① to the sink drain outlet using nut ②.
- Attach the end of the hose ④ to adapter ①.
- Use a screwdriver to tighten hose clip ③ up close to the nut.

Electrical connection U.K.

All electrical work should be carried out by a suitably qualified and competent person, in strict accordance with current national and local safety regulations (BS 7671 in the UK).

Ensure power is not supplied to the appliance until after installation work has been carried out.

The appliance is supplied with a mains cable with moulded plug ready for connection to a 230-240V mains supply.

Please ensure the connection data quoted on the data plate match the household mains supply.

Connection should be made via a suitable switched socket which is easily accessible after installation.

For extra safety it is advisable to protect the machine with a suitable residual current device (RCD). Contact a qualified electrician for advice.

Do not connect via an extension lead. Extension leads do not guarantee the required safety of the appliance (e.g. danger of overheating).

Non-rewireable plugs BS 1363

The fuse cover must be refitted when changing the fuse, and if the fuse cover is lost, the plug must not be used until a suitable replacement is obtained. The colour of the correct replacement cover is that of the coloured insert in the base of the plug, or the colour that is embossed in words on the base of the plug (as applicable to the design of plug fitted).

Replacement fuses should be ASTA approved to BS 1362 and have the correct rating. Replacement fuses and fuse covers may be purchased from your local electrical supplier.

WARNING: THIS APPLIANCE MUST BE EARTHED

Consumption data

		Load kg	Energy kWh	Water Litres	Duration h:min	Residual moisture %
Cottons	90 °C	9.0	2.40	65	2:29	50
	60 °C	9.0	1.45	65	2:29	50
	60 °C	4.5	1.10	52	2:19	50
	60°C*	9.0	0.80	54	2:59	44
	60°C*	4.5	0.50	49	2:59	44
	40 °C	9.0	1.20	61	2:39	50
	40 °C	4.5	0.45	36	1:19	50
	40°C*	4.5	0.35	42	2:59	44
	20 °C	9.0	0.40	72	2:39	46
Minimum iron	30 °C	4.0	0.50	52	1:59	30
Delicates	30 °C	3.0	0.40	40	1:09	–
Woollens	30 °C	2.0	0.23	35	0:38	–
Automatic plus	40 °C	6.0	0.77	55	1:59	–
QuickPowerWash	40 °C	5.0	0.75	45	0:59	–
Express 20[1)]	40 °C	3.5	0.30	25	0:20	–
Shirts[2)]	60 °C	2.0	0.76	40	1:31	–

1) Short option activated

2) Steam smoothing option deactivated

Note for test institutes

*Test programme in accordance with EN 60456 and energy label with Directive 1061/2010

Consumption data can vary from the nominal values given depending on water pressure, water hardness, water inlet temperature, room temperature, type and volume of load, fluctuations in the electricity supply and any options selected.

With the *PowerWash 2.0* washing technique, during the heating phase, the temperature measured by the sensor in the suds container is higher than the actual temperature of the laundry.
The temperature measured there **does not** reflect the temperature of the laundry.

The consumption data shown in the EcoFeedback display can vary from the consumption data quoted here. The variations arise from component tolerances and on-site conditions e.g. fluctuations in the pressure of the water supply, mains voltage and fluctuations in the mains voltage.

Technical data

Height	850 mm
Width	596 mm
Depth	636 mm
Depth with door open	1054 mm
Height for building under	850 mm
Width for building under	600 mm
Weight	Approx. 100 kg
Capacity	9 kg dry laundry
Voltage	See data plate
Connected load	See data plate
Fuse rating	See data plate
Consumption data	See "Consumption data"
Minimum flow pressure	100 kPa
Maximum flow pressure	1000 kPa
Inlet hose length	1.60 m
Drain hose length	1.50 m
Mains connection cable length	2.00 m
Delivery head max.	1.00 m
Maximum drainage length	5.00 m
LEDs	Class 1
Test certificates awarded	See data plate
Power consumption when switched off	0.1 W
Power consumption when not switched off	3.5 W

You can use the settings menu to alter the machine's electronics to suit changing requirements.

Settings can be altered at any time.

To access Settings

Before you begin, ensure that:

– The washing machine is switched on.

– The standard display is showing.

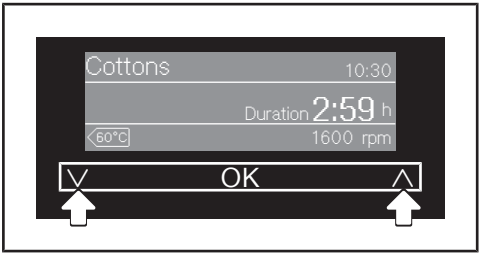

■ Touch the ∨ and ∧ sensors at the same time.

You are now in the Settings menu.

Selecting a setting

■ Touch the ∨ or ∧ sensor until the setting you want is highlighted in the display.

– The ∨ sensor scrolls down the list.

– The ∧ sensor scrolls up the list.

■ Touch the *OK* sensor to select the setting which is highlighted in white.

Changing a setting

■ The options available for the setting will appear in the display.

– The ∨ sensor scrolls down the list.

– The ∧ sensor scrolls up the list.

The option which is selected will have a tick ✓ next to it.

■ When the option you want is highlighted in white in the display touch the *OK* sensor to activate it.

To exit Settings

■ Touch the ∨ and ∧ sensors at the same time or turn the programme selector.

Language

The display can be set to appear in one of several different languages.

The flag after the word *Language* acts as a guide to prevent a language which will not be understood from being set.

The selected language will be stored in memory.

TwinDos

You can set the type and amount of detergent and also start a cleaning programme for the TwinDos system.

Detergent/amount

The washing machine is pre-set as standard for UltraPhase 1 and UltraPhase 2 for hardness range II ( ).

The settings must be changed in the electronics:

– for water hardness range I ( ) and water hardness range III ( ).

– when changing to a different detergent or fabric conditioner. The TwinDos containers (optional accessories) are required for this.

Dosage amounts for UltraPhase 1 and UltraPhase 2

UltraPhase 1	48 ml	60 ml	72 ml
UltraPhase 2	36 ml	45 ml	54 ml

Adjusting the dosage amount

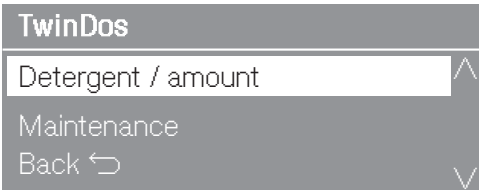

■ Touch the *OK* sensor.

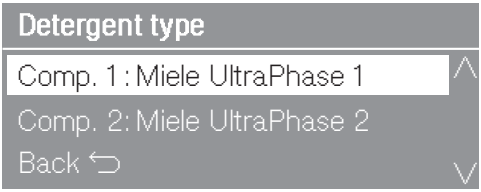

■ Touch the *OK* sensor.

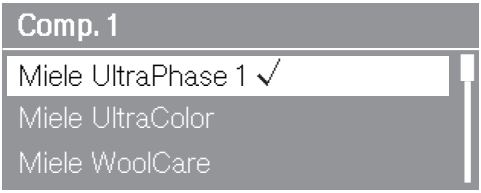

■ Touch the *OK* sensor.

Dosage - Compartment 1

60 ml
Normal soiling

- Use the ∧ and ∨ sensors to adjust the dosage amount as required and confirm this value with the *OK* sensor.

ℹ Now enter the settings for UltraPhase 2.

- Confirm the message with the *OK* sensor.

Dosage - Compartment 2

45 ml
Normal soiling

- Use the ∧ and ∨ sensors to adjust the dosage amount as required and confirm this value with the *OK* sensor.

The dosage amount has been adjusted.

Changing the detergent type

Dosage amounts for Miele products (e.g. UltraColor, Miele fabric conditioner) are pre-set for water hardness range II ( ).

TwinDos

Detergent / amount
Maintenance
Back ⮌

- Touch the *OK* sensor.

Detergent type

Comp. 1 : Miele UltraPhase 1
Comp. 2: Miele UltraPhase 2
Back ⮌

- Touch the *OK* sensor.

Comp. 1

Miele UltraPhase 1 ✓
Miele UltraColor
Miele WoolCare

- Select the detergent you want using the ∧ and ∨ sensors and confirm your selection with the *OK* sensor.

Dosage - Compartment 1

95 ml
Normal soiling

■ Confirm the amount of detergent with the *OK* sensor or change this using the ∧ and ∨ sensors.

ℹ Settings for compartment 2 rejected: dual component detergent only works when both types have been set.

■ Confirm the message with the *OK* sensor.

Detergent type

Comp. 1 : Miele UltraColor ∧
Comp. 2 : Not defined
Back ∨

Compartment 1 has been selected. If you wish to change the setting for compartment 2, proceed as for compartment 1.

The electronics are set for the new detergent.

Maintenance

The washing machine has a cleaning programme for cleaning the TwinDos system containers and the hoses inside the washing machine.

The TwinDos system must be cleaned if the system has not been used for a long period of time or if you are changing brand of liquid detergent or fabric conditioner. See "Cleaning and care - Cleaning the TwinDos system" for more details.

Time of day

For adjusting the clock display.

Options

– Clock format
  The time of day can be displayed as a 24 hour or 12 hour clock.

– Set the time of day
  For setting the current time of day.

Degree of soiling

You can select the default setting for the degree of soiling or switch off the degree of soiling query.

Options

- Default setting
  You can choose between the Light, Normal or Heavy degree of soiling settings.
  Factory default setting: Normal.
- Query
  You can switch the degree of soiling query on or off.
  Factory default setting: On

Buzzer volume

You can select one of seven different settings for the buzzer volume.

The settings are represented by a bar chart. At the lowest setting, the buzzer is switched off.

Keypad tone

Each touch of a sensor or press of a button is confirmed with an audible tone.

Factory default setting: the keypad tone is switched on.

Total consumption

In this setting you can check the saved energy and water consumption values.

Options

- Display
  Shows the sum of the energy and the sum of the water used by the previous programmes.
- Reset function
  The energy consumption and water consumption totals are reset to zero.

Code

The code prevents the washing machine being used without your knowledge.

Options

- Activate
  The code is 125 and can be activated.
  When the code has been activated, you have to enter the code after switching the washing machine on. Otherwise the washing machine cannot be operated.
- Deactivate
  For using the washing machine without entering the code. This only appears if the code has been activated previously.
- Change
  You can enter a code of your own.

Important. Make a note of your new code. If you forget the code, the washing machine will need to be unlocked by Miele Service.

Temperature unit

The temperature can be displayed as degrees Celsius (°C) or Fahrenheit (°F).

Factory default setting: Celsius (°C).

Display brightness

There are seven different display brightness settings.

The brightness changes as soon as you select a different setting.

Display switch-off setting

To save energy, the display will go out and the *Start*/*Stop* button will flash slowly.

Options

- On
  The display will go out after 10 minutes.
- On (not in current programme) (Factory default setting)
  The display will remain on while the programme is running but will go out 10 minutes after the end of the programme.
- Off
  The display will remain on.

Machine switch-off setting

The washing machine will switch off automatically after the end of the programme/anti-crease phase or after being switched on if no further selection is made.

Options

- 15 minutes (Factory default setting)
  The washing machine will switch itself off after 15 minutes.
- 20 minutes
  The washing machine will switch itself off after 20 minutes.
- 30 minutes
  The washing machine will switch itself off after 30 minutes.

Display maximum load

After a programme is selected the maximum load appears in the display for a short time.

You can choose whether the maximum loading capacity is displayed or not.

Factory default setting: *Display maximum load* is switched on.

Memory

The washing machine will save the settings (temperature, spin speed and some of the options) which have been selected for a programme after the programme has started.

When this programme is chosen again, these saved settings will appear in the display.

Factory default setting: the Memory function is switched off.

Longer pre-wash Cottons

If you require a longer pre-wash you can extend the Cottons programme's standard pre-wash time of 25 minutes

Options

- No increase (Factory default setting)
  25 minute pre-wash
- +6 min
  31 minute pre-wash
- +9 min
  34 minute pre-wash
- +12 min
  37 minute pre-wash

Soak duration

You can set a duration for the soak process of between 30 minutes and 5 hours.

You can select the duration in 30 minute increments. When the *Soak* option is selected the laundry will be soaked for the duration selected.

Gentle action

Activating gentle action reduces the drum action and is suitable for washing slightly soiled items more gently.

Gentle action can be activated for the *Cottons* and *Minimum iron* programmes.

Factory default setting: Gentle action is switched off.

Reduce temp.

The boiling point for water is lower at high altitudes. In order to avoid water boiling, Miele recommend activating the reduce temperature setting at altitudes of more than 2000 m above sea level. The maximum temperature is reduced to 80 °C even when a higher temperature is selected.

Factory default setting: the reduce temperature setting is switched off.

Water plus level

The water level can be increased in 4 stages by activating the Water plus option.

Stages:

- Normal (Factory default setting)
- Plus ♢
- Plus ♢♢
- Plus ♢♢♢

Maximum rinse level

The water level in the rinse cycle can be permanently set to the highest value.

This function is useful for allergy sufferers as it achieves an excellent rinse result. Water consumption will increase.

Factory default setting: the maximum rinse level setting is switched off.

Suds cooling

When this is activated, additional water flows into the drum at the end of the main wash to cool the suds down. Hot suds can damage plastic drainage pipes.

Suds cooling takes place when a temperature of 70 °C or higher is selected for the Cottons programme.

Suds cooling should be activated:

- to prevent the danger of scalding if the drain hose is hooked over the edge of a sink or basin.
- where drainage pipes do not comply with DIN 1986.

Factory default setting: Suds cooling is switched off.

Low water pressure

If the water pressure is less than 1 bar (100 kPa) the programme will be cancelled and the fault message Water intake fault will appear.

If the on-site water pressure cannot be increased, activating this function will prevent the programme from being cancelled.

Factory default setting: *Low water pressure* is switched off.

Anti-crease

The anti-crease function helps prevent creasing if laundry is not going to be removed immediately after the end of the programme.

The drum continues to turn at intervals for up to 30 minutes at the end of the programme. The door can be opened at any time.

Factory default setting: anti-crease is switched on.

Delay start

For specifying which time prompt should appear with the delay start function.

Options

- Start at
  With the Delay start function you specify at what time the wash programme should begin.
- Finish at (Factory default setting)
  With the Delay start function you specify at what time the wash programme should end.

Optional accessories

Detergent, fabric care, additives and machine care products are available for this washing machine. All the products have been designed for Miele washing machines.

These and many other useful products can be ordered via the internet at www.miele-shop.com or from Miele (see end of this booklet for contact details).

Detergent

UltraPhase 1 and UltraPhase 2

- universal liquid detergent and detergent enhancer dispensed as two components.
- suitable for white and coloured laundry
- no need to refill as the components for the TwinDos system are supplied in single use cartridges.

UltraWhite

- powder detergent
- suitable for white and light coloured laundry as well as heavily soiled cotton items
- effective stain removal even at low temperatures

UltraColor

- liquid detergent for coloureds
- suitable for coloured and dark/black garments
- protects bright colours from fading
- effective stain removal even at low temperatures

Wool and delicates detergent

- liquid detergent for delicates
- particularly suitable for woollen and silk garments
- cleans at temperatures as low as 20 °C, helps retain the shape of delicate garments and protect colours

Specialist detergents

Specialist detergents are available as capsules in convenient single dose amounts or in a handy bottle.

Outdoor

- liquid detergent for outerwear and performance clothing
- cleans with care and is gentle on colours
- with lanolin to care for and condition membrane fabric

Sport

- liquid detergent for sportswear and fleece garments
- neutralises unpleasant odours
- retains the shape of the textiles

Down items

- liquid detergent suitable for pillows, sleeping bags and down filled items
- retains the elasticity of down and feather filled items
- retains the breathability of down filled items
- prevents down filling clumping together

WoolCare

- liquid detergent for woollens and delicates
- with a special wheat protein conditioning formula
- helps prevent pilling
- gentle on colours
- only available as capsules

SilkCare

- liquid detergent for silks
- with a special silk protein conditioning formula
- gentle on colours
- only available as capsules

Fabric care

Fabric care agents are available as capsules in convenient single dose amounts or in a handy bottle.

Proofing agent

- for reproofing microfibre garments e.g. rain coats etc.
- retains the breathability of garments

Fabric conditioner

- fresh, natural fragrance
- makes laundry soft to handle

Additives

Booster

- for removing stains
- suitable for white and coloured laundry
- available as capsules in convenient single dose amounts

Machine care products

Machine cleaner

- for cleaning the washing machine thoroughly and effectively
- removes grease, bacteria and unpleasant odours

Descaling agent

- removes heavy limescale deposits
- mild and gentle with natural citric acid

United Kingdom
Miele Co. Ltd.
Fairacres, Marcham Road
Abingdon, Oxon, OX14 1TW
Customer Contact Centre Tel: 0330 160 6600
E-mail: mielecare@miele.co.uk
Internet: www.miele.co.uk

Australia
Miele Australia Pty. Ltd.
ACN 005 635 398
ABN 96 005 635 398
1 Gilbert Park Drive, Knoxfield, VIC 3180
Tel: 1300 464 353
Internet: www.miele.com.au

China
Miele (Shanghai) Trading Ltd.
1-3 Floor, No. 82 Shi Men Yi Road
Jing' an District
200040 Shanghai, PRC
Tel: +86 21 6157 3500, Fax: +86 21 6157 3511
E-mail: info@miele.cn, Internet: www.miele.cn

Miele (Hong Kong) Limited
41/F - 4101, Manhattan Place
23 Wang Tai Road
Kowloon Bay, Hong Kong
Tel: (852) 2610 1025, Fax: (852) 3579 1404
Email: customerservices@miele.com.hk
Website: www.miele.hk

India
Miele India Pvt. Ltd.
Ground Floor, Copia Corporate Suites
Plot No. 9, Jasola, New Delhi - 110025
Tel: 011-46 900 000, Fax: 011-46 900 001
E-mail: customercare@miele.in, Internet: www.miele.in

Ireland
Miele Ireland Ltd.
2024 Bianconi Avenue
Citywest Business Campus, Dublin 24
Tel: (01) 461 07 10, Fax: (01) 461 07 97
E-Mail: info@miele.ie, Internet: www.miele.ie

Manufacturer: Miele & Cie. KG
Carl-Miele-Straße 29, 33332 Gütersloh, Germany

Malaysia
Miele Sdn Bhd
Suite 12-2, Level 12
Menara Sapura Kencana Petroleum
Solaris Dutamas No. 1, Jalan Dutamas 1
50480 Kuala Lumpur, Malaysia
Phone: +603-6209-0288
Fax: +603-6205-3768

New Zealand
Miele New Zealand Limited
IRD 98 463 631
Level 2, 10 College Hill
Freemans Bay, Auckland 1011, NZ
Tel: 0800 464 353
Internet: www.miele.co.nz

Singapore
Miele Pte. Ltd.
163 Penang Road
04 - 03 Winsland House II
Singapore 238463
Tel: +65 6735 1191, Fax: +65 6735 1161
E-Mail: info@miele.com.sg
Internet: www.miele.sg

South Africa
Miele (Pty) Ltd
63 Peter Place, Bryanston 2194
P.O. Box 69434, Bryanston 2021
Tel: (011) 875 9000, Fax: (011) 875 9035
E-mail: info@miele.co.za
Internet: www.miele.co.za

United Arab Emirates
Miele Appliances Ltd.
Gold & Diamond Park
Office No. 217-6, Sheikh Zayed Road
P.O. Box 11 47 82 - Dubai
Tel. +971 4 3044 999
Fax. +971 4 3418 852
800-MIELE (64353)
E-Mail: info@miele.ae
Website: www.miele.ae

Miele

WKR 771 WPS

CE

en-GB

M.-Nr. 10 201 050 / 01