Washing Machine

User Manual

WTIK72151

Document Number :2820528918_EN/ 06-10-20.(14:48)

Please read these instructions first before using your appliance

Dear Customer,

Thank you for choosing a Beko appliance.

Please take some time to read this user manual before using your appliance, to ensure you know how to safely operate the controls and functions.

Carefully follow all unpacking and installation instructions to ensure the appliance is correctly connected and fitted prior to use.

Please write your product model and serial number on the last page of this user manual, and store in a safe location close to the appliance for easy future reference.

This user manual may also be applicable for several other models. Differences between models will be listed.

If you have any questions or concerns, please call our contact centre or find help and information online at www.beko.co.uk

Explanation of symbols used throughout this User Manual

	• Important information or useful hints about usage.
	• Warning for hazardous situations with regard to life and property.
	• Warning for electric shock.
	• Recyclable materials.

Do not dispose of the packaging materials together with domestic or other wastes. Take them to the packaging material collection points designated by the local authorities.

This product was manufactured using the latest technology in environmentally friendly conditions.

1 General safety instructions

This section includes security instructions which may help prevent the injuries and material damage risks. All kinds of warranties shall be invalid if these instructions are not observed.

1.1 Life and property safety

CAUTION!

- Never place the product on a carpet-covered floor. Otherwise, lack of airflow beneath the machine will cause electrical parts to overheat. This will cause problems with your product.
- Unplug the product if it is not in use.
- Always have the installation and repairing procedures carried out by the Authorised Service Agent. The manufacturer shall not be held liable for damages that may arise from procedures carried out by unauthorised persons.
- The water supply and draining hoses must be securely fastened and remain undamaged. Otherwise, there is the risk of water leakage.
- While there is still water inside the product, never open the loading door or remove the filter. Otherwise, risk of flooding and injury from hot water will occur.
- Do not force open the locked loading door. The door will open immediately after the washing cycle has ended. If the door does not open, apply the solutions provided for “Loading door cannot be opened.” error in the Troubleshooting section. In case of forcing the loading door to open, the door and the lock mechanism may get damaged.
- Use detergents, softeners and supplements suitable for automatic washing machines only.
- Follow the instructions on the label of textile products and the detergent package.
- The water supply pressure required to run the product is between 1 to 10 bars (0.1 – 1 MPa)
- Do not use old or used water inlet hoses on the new product. It may cause stains on your laundry.

1.2 Hot surface safety

CAUTION!

- The glass of the loading door gets too hot while washing at higher temperatures. Therefore, especially do not allow children touch the loading door glass while washing.

1.3 Children's safety

CAUTION!

- This product can be used by children at and above 8 years old and by persons whose physical, sensory or mental capabilities were not fully developed or who lack experience and knowledge provided that they are supervised or trained on the safe usage of the product and the risks it brings out. Children should not play with the product. Cleaning and maintenance works should not be performed by children unless they are supervised by someone. Children under the age of 3 should be kept away unless continuously supervised.
- Packaging materials are dangerous for the children. Keep packaging materials in a safe place away from reach of the children.
- Electrical products are dangerous for the children. Keep children away from the product when it is in use. Do not allow them to play with the product. Use child lock to prevent children from intervening with the product.

CAUTION!

- Do not forget to close the loading door when leaving the room where the product is located.
- Store all detergents and additives in a safe place away from the reach of the children by closing the cover of the detergent container or sealing the detergent package.

1.4 Electrical safety

DANGER

- If the product has a failure, it should not be operated unless it is repaired by the Authorised Service Agent! There is the risk of electric shock!
- This product is designed to resume operating in the event of powering on after a power interruption. If you wish to cancel the programme, see "Cancelling the programme" section.
- Plug the product into a grounded outlet protected by a 13 A fuse. Do not neglect to have the grounding installation made by a qualified electrician. Our company shall not be liable for any damages that will arise when the product is used without grounding in accordance with the local regulations.

DANGER

- Do not wash the product by spraying or pouring water onto it! There is the risk of electric shock!
- Never touch the power cable plug with wet hands! Never unplug by pulling on the cable. Always press on the plug with one hand and pull out the plug by grabbing with the other hand.
- Product should be unplugged during installation, maintenance, cleaning and repair procedures.
- If the power cable is damaged, it must be replaced by the manufacturer, authorised service or a similarly qualified person (preferably an electrician) or someone designated by the importer in order to avoid possible risks.

2.Important instructions for environment

2.1 Compliance with WEEE Directive

This product complies with EU WEEE Directive (2012/19/EU). This product bears a classification symbol for waste electrical and electronic equipment (WEEE).

This product has been manufactured with high quality parts and materials which can be reused and are suitable for recycling. Do not dispose of the waste product with normal domestic and other wastes at the end of its service life. Take it to the collection center for the recycling of electrical and electronic equipment. Please consult your local authorities to learn about these collection centers.

Compliance with RoHS Directive:

The product you have purchased complies with EU RoHS Directive (2011/65/EU). It does not contain harmful and prohibited materials specified in the Directive.

2.2 Package information

Packaging materials of the product are manufactured from recyclable materials in accordance with our National Environment Regulations. Do not dispose of the packaging materials together with the domestic or other wastes. Take them to the packaging material collection points designated by the local authorities.

3.Intended use

- This product has been designed for domestic use. It is not for commercial purposes or it should not be used out of its intended use.
- The product must only be used for washing and rinsing of laundry that are marked accordingly.
- The manufacturer waives any responsibility arisen from incorrect usage or transportation.
- The service life of your product is 10 years. During this period, original spare parts will be available to operate the appliance properly.
- This appliance is intended to be used in household and similar applications such as:

– staff kitchen areas in shops, offices and other working environments;

– farm houses;

– by clients in hotels, motels and other residential type environments;

– bed and breakfast type environments;

– areas for communal use in blocks of flats or in launderettes.

4 Technical specifications

Supplier name or trademark	Beko
Model name	WTIK72151
	7179242700
Rated capacity (kg)	7
Maximum spin speed (rpm)	1200
Built-in	Yes
Height (cm)	82
Width (cm)	60
Depth (cm)	56
Single Water inlet / Double Water inlet	• / -
• Available	
Electrical input (V/Hz)	230 V / 50Hz
Total current (A)	10
Total power (W)	2200
Main model code	9211

INFORMATION

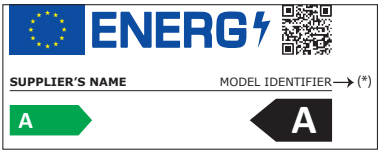

- The model information as stored in the product database can be reached by entering following website and searching for your model identifier (*) found on energy label.

  https://eprel.ec.europa.eu/

Symbols Table

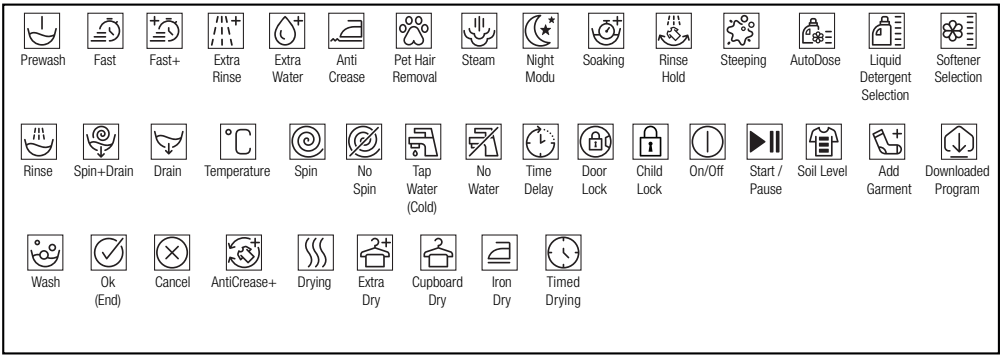

4.1 Installation

- Apply to the nearest authorised service agent for the installation of your product.
- Preparation of the location and electrical, tap water and waste water installations at the place of installation is under customer's responsibility.
- Make sure that the water inlet and discharge hoses as well as the power cable are not folded, pinched or crushed while pushing the product into its place after installation or cleaning procedures.
- Make sure that the installation and electrical connections of the product are performed by competent persons. Manufacturer shall not be held liable for damages that may arise from procedures carried out by unauthorised persons.
- Prior to installation, visually check if the product has any defects on it. If so, do not have it installed. Damaged products cause risks for your safety.

4.1.1 Appropriate installation location

- Place the product on a hard and level floor. Do not put it onto a carpet with high pile or other similar surfaces.
- When the washing machine and dryer are placed on top of each other, their total weight –when loaded– amounts to 180 kg. Place the product on a solid and flat floor that has sufficient load carrying capacity!
- Do not place the product on the power cable.
- Do not install the product in the environments where the temperature falls below 0 ºC.
- Leaving a gap at the sides of the machine is suggested to reduce vibration and noise
- On a raised floor, do not place the product next to the edge or on a platform.
- Do not place heat sources such as Hobs, Irons, Ovens, etc. on the washing machine and do not use them on the product.

4.1.2 Removing packaging reinforcement

Tilt the machine backwards to remove the packaging reinforcement. Remove the packaging reinforcement by pulling the ribbon. Do not make this operation alone by yourself.

4.1.3 Removing the transportation locks

1 Loosen all bolts with an appropriate wrench until they turn freely.
2 Remove the transport safety bolts by turning them slightly.
3 Insert the plastic covers in the bag containing the user manual to the openings on the rear panel.

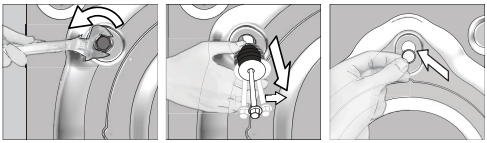

CAUTION!

- Remove the transportation safety bolts before operating the washing machine! Otherwise, the product will be damaged.

INFORMATION

- Keep the transportation safety bolts in a safe place to reuse when the washing machine needs to be moved again in the future.
- Install the transport safety bolts in reverse order of the disassembly procedure.
- Never move the product without the transportation safety bolts properly fixed in place!

4.1.4 Connecting water supply

INFORMATION

- It is necessary to have 10 – 80 liters of water flowing from the fully open tap in one minute to have your machine run smoothly. Attach a pressure reducing valve if water pressure is higher.

CAUTION!

- Models with a single water inlet should not be connected to the hot water tap. In such a case the laundry will get damaged or the product will switch to protection mode and will not operate.

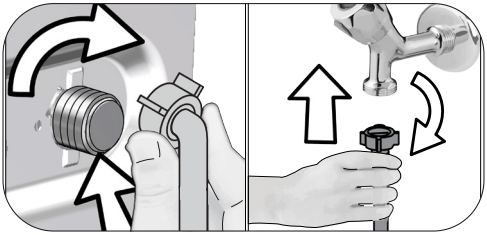

1 Tighten the nuts of the hose by hand. Never use a tool when tightening the nuts.
2 When hose connection is completed, check whether there is leak problems at the connection points by opening the taps fully. If any leaks occur, turn off the tap remove the nut. Retighten the nut carefully after checking the seal. In order to prevent the water leaks and resultant damages, keep the taps closed when you do not use the product.

4.1.5 Connecting the drain hose to the drain

- Attach the end of the drain hose directly to waste water drain, lavatory or bathtub.

CAUTION!

- Your drain house will be flooded if the hose comes out of its housing during water discharge. Moreover, there is risk of scalding due to high washing temperatures! In order to prevent such situations and make sure that the machine performs water intake and discharge processes without any problem, fix the drain hose securely.

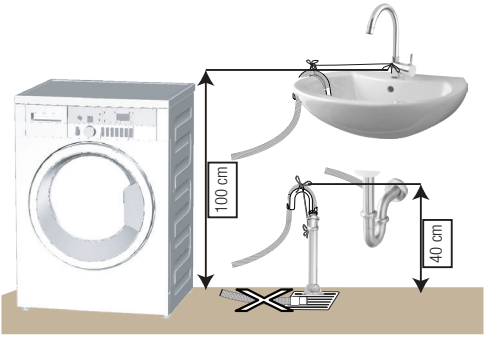

- Connect the drain hose to a minimum height of 40 cm and a maximum height of 100 cm.
- In case the drain hose is elevated after laying it on the floor level or close to the ground (less than 40 cm above the ground), water discharge becomes more difficult and the laundry may come out excessively wet. Therefore, follow the heights described in the figure.
- To prevent the waste water to siphon back into the machine again and to ensure easy drainage, do not immerse the end of the hose into the waste water or do not insert it into the drain for more than 15 cm. If it is too long, cut it short.
- The end of the hose should not be bent, it should not be stepped on and the hose must not be pinched between the drain and the machine.
- If the length of the hose is too short, use it by adding an original extension hose. Length of the hose may not be longer than 3.2 m. To avoid water leak failures, the connection between the extension hose and the drain hose of the product must be fitted well with an appropriate clamp as not to come off and leak.

4.1.6 Adjusting the feet

CAUTION!

- In order to ensure that the product operates more silently and vibration-free, it must stand level and balanced on its feet. Balance the machine by adjusting the feet. Otherwise, the product may move from its place and cause crushing and vibration problems.
- Do not use any tools to loosen the lock nuts. Otherwise, they will get damaged.

1 Loosen the lock nuts on the feet by hand.
2 Adjust the feet until the product stands in a stable and balanced way.
3. Tighten all lock nuts by hand again.

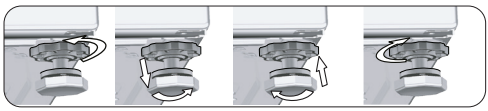

Adjusting the feet with water level

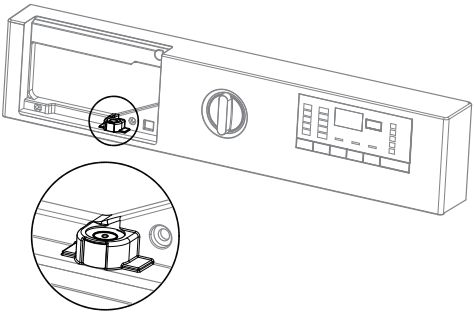

- You must remove the Detergent Drawer to set the Water Level.
- For the system to operate properly, the bubble inside the Water Level must be in the **middle**.
- If the bubble inside the Water Level is on the **left**, the pre-set **right** foot of the Washing Machine must be adjusted.
- If the bubble inside the Water Level is on the **right**, the pre-set **left** foot of the Washing Machine must be adjusted.
- If the bubble inside the Water Level is at the **back**, the pre-set **front** feet of the Washing Machine must be turned to the left (clockwise).
- If the bubble inside the Water Level is at the **front**, the pre-set **front** feet of the Washing Machine must be turned to the right (anti-clockwise).

4.1.7 Electrical connection

Connect the product to a grounded outlet protected by a 13 A fuse. Our company shall not be liable for any damages that will arise when the product is used without grounding in accordance with the local regulations.

- Connection must comply with national regulations.
- The wiring for the electrical outlet circuit must be sufficient to meet the appliance requirements. Use of a Groud Fault Circuit Interrupter (GFCI) is recommended.
- Power cable plug must be within easy reach after installation.
- If the current value of the fuse or breaker in the house is less than 13 Amps, have a qualified electrician install a 13 Amp fuse.
- The voltage specified in the “Technical specifications” section must be equal to your mains voltage.
- Do not make connections via extension cables or multi-plugs.

CAUTION!

- Damaged power cables must be replaced by the Authorised Service Agents.

Electrical requirements

Before you insert the plug into the wall socket make sure that the voltage and the frequency shown in the rating label corresponds to your electricity supply.

We recommend that this appliance be connected to the mains supply via a suitable switched and fused socket in a readily accessible position.

Should the mains lead of the appliance become damaged or need replacing at any time, it must be replaced by a special purpose made mains lead which can only be obtained from a Authorised Service Agent.

WARNING!

- This appliance must be earthed

If the fitted moulded plug is not suitable for your socket, then the plug should be cut off and an appropriate plug fitted.

Destroy the old plug, which is cut off as a plug with a bared cord could cause a shock hazard if inserted into a socket elsewhere in the house.

The moulded plug on this appliance incorporates a 13A fuse. Should the fuse need to be replaced an ASTA approved BS1362 fuse of the same rating must be used. Do not forget to refit the fuse cover. In the event of losing the fuse cover, the plug must not be used until a replacement fuse cover has been fitted. Colour of the replacement fuse cover must be the same colour as that visible on the pin face of the plug. Fuse covers are available from any good electrical store.

Important

Fitting a different plug

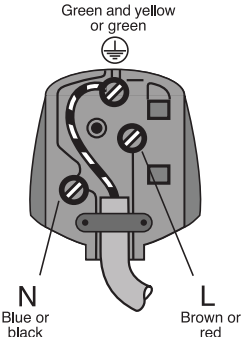

As the colours of the wires in the mains lead of this appliance may not correspond with the coloured markings identifying the terminals on your plug, proceed as follows:

1 Connect the green - yellow or green (earth) wire to the terminal in the plug marked ‘E’ or with the symbol f or coloured green and yellow or green.
2 Connect the blue (neutral) wire to the terminal in the plug marked ‘N’ or coloured black.
3 Connect the brown (live) wire to the terminal in the plug marked ‘L’ or coloured red.

With the alternative plugs a 13A fuse must be fitted either in the plug or adaptor or in the main fuse box. If in doubt contact a qualified electrician.

Transportation of the product

1. Unplug the product before transporting it.
2. Remove water drain and water supply connections.
3. Drain all water that has remained in the product.
4. Install transportation safety bolts in the reverse order of removal procedure.

INFORMATION!

- Never move the product without the transportation safety bolts properly fixed in place!

WARNING!

- Packaging materials are dangerous to children. Keep packaging materials in a safe place away from reach of the children.

4.1.8 Initial use

Before starting to use the product make sure that the preparations are made which are in line with the “Important Safety and Environment Instructions” and the instructions in the “Installation” section.

To prepare the product for washing laundry, perform first operation in Drum Cleaning programme. If this programme is not available in your machine, apply the method which is described in the section 4.4.2.

INFORMATION

- Use an anti-limescale suitable for the washing machines.
- Some water might have remained in the product due to the quality control processes in the production. It is not harmful for the product.

4.2 Preparation

4.2.1 Sorting the laundry

- Sort laundry according to type of fabric, colour, and degree of soiling and allowable water temperature.
- Always obey the instructions given on the garment tags.

4.2.2 Preparing laundry for washing

- Laundry items with metal attachments such as, underwired bras, belt buckles or metal buttons will damage the machine. Remove the metal pieces or wash the clothes by putting them in a laundry bag or pillow case.
- Take out all substances in the pockets such as coins, pens and paper clips, and turn pockets inside out and brush. Such objects may damage the product or cause noise problem.
- Put small size clothes such as infant's socks and nylon stockings in a laundry bag or pillow case.
- Place curtains in without compressing them. Remove curtain attachment items.
- Fasten zippers, sew loose buttons and mend rips and tears.
- Wash “machine washable” or “hand washable” labeled products only with an appropriate programme.
- Do not wash colours and whites together. New, dark coloured cottons release a lot of dye. Wash them separately.
- Tough stains must be treated properly before washing. If unsure, check with a dry cleaner.
- Use only dyes/colour changers and limescale removers suitable for machine wash. Always follow the instructions on the package.
- Wash trousers and delicate laundry turned inside out.
- Keep laundry items made of Angora wool in the freezer for a few hours before washing. This will reduce pilling.
- Laundry that are subjected to materials such as flour, lime dust, milk powder, etc. intensely must be shaken off before placing into the machine. Such dusts and powders on the laundry may build up on the inner parts of the machine in time and can cause damage.

4.2.3 Tips for energy and water saving

Following information will help you use the product in an ecological and energy/water-efficient manner.

- Operate the product in the highest load capacity allowed for the programme you have selected, but do not overload. See, “Programme and consumption table”.
- Observe the temperature instructions on the detergent packaging.
- Wash slightly soiled laundry at low temperatures.
- Use faster programmes for small quantities of lightly soiled laundry.
- Do not use prewash and high temperatures for laundry that is not heavily soiled or stained.
- If you plan to dry your laundry in a dryer, select the highest spin speed recommended during washing process.
- Do not use more detergent than the recommended on the detergent packaging.

4.2.4 Loading the laundry

1. Open the loading door.
2. Place laundry items loosely into the machine.
3. Push the loading door to close until you hear a locking sound. Ensure that no items are caught in the door.

4.2.5 Correct load capacity

The maximum load capacity depends on the type of laundry, the degree of soiling and the washing programme desired.

The machine automatically adjusts the amount of water according to the weight of the loaded laundry.

WARNING

- Follow the information in the “Programme and consumption table”. When overloaded, machine’s washing performance will drop. Moreover, noise and vibration problems may occur.

4.2.6 Using detergent and softener

Choosing the detergent type

Detergent type to be used depends on the washing programme, fabric type and color.

- Use different detergents for coloured and white laundry.
- Wash your delicate clothes only with special detergents (liquid detergent, wool shampoo, etc.) intended solely for delicate clothes and at suggested programmes.
- When washing dark coloured clothes and quilts, it is recommended to use liquid detergent.
- Wash woolens at suggested programme with special detergent made specifically for woolens
- Please review the program descriptions part for suggested program for different textiles.
- All recommendations about detergents are valid for selectable temperature range of programmes.

WARNING

- Use only detergents manufactured specifically for washing machines.
- Do not use soap powder.

INFORMATION

- When using detergent, softener, starch, fabric dye, bleach or limescale remover read the manufacturer's instructions on the package carefully and follow the suggested dosage values. Use measuring cup if available.

Detergent Drawer

Detergent drawer of your washing machine consists of four different compartments for powder main wash detergent, liquid main wash detergent, liquid softener and powder pre-wash detergent. Each of these laundry additives are dispensed automatically in the relevant time during the washing Programme.

Do not place the laundry additives directly into the drum. Always use the detergent drawer.

Do not close the drawer too fast after putting the laundry additives. This may cause the additives be dispensed early, creating unsatisfactory washing results and fabric damage.

INFORMATION

- Do not open the drawer during washing Programme.

The detergent drawer compartments are indicated below:

1) Left compartment with number "II" (Main wash compartment for powder detergent or powder bleach/stain remover)
2) Left compartment with number "II ♦" (Main wash compartment for liquid detergent or liquid stain remover)
3) Middle compartment with number "I" (pre-wash compartment for powder detergent, powder stain remover or liquid bleach - liquid bleach must be added either during the pre-wash or during the first rinsing step of the washing Programme). Liquid bleach must be added manually while the machine takes in water.
4) Right compartment with "✻" symbol (liquid softener compartment)

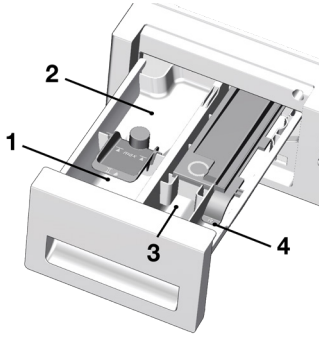

(II) Main Wash Compartment

Before starting the washing Programme, put powder detergent into the left compartment with number "II". Use the detergent manufacturer's measuring cup and follow the instructions on the package. Powder bleach/ stain remover must also be put into this compartment.

Put the liquid detergent into the main wash compartment with number "II ♦" before starting the washing Programme. Liquid stain remover must be put into this compartment.

Put the suggested amount of liquid detergent into the left compartment with "II ♦" symbol and dilute it to the maximum filling level line (max. II ♦) with warm water.

Particularly the concentrated detergents must be diluted with warm water; otherwise, the siphon may get clogged in time.

Do not fill the detergent above the maximum filling level line; otherwise the excess amount of detergent will reach the laundry without water and may cause stains on the garments.In this case you will need to refill the compartment. Do not pour the detergent onto the laundry directly since this may cause stains on the garments.

Liquid Softener Compartment

Put the suggested amount of liquid softener into the right compartment with "✿" symbol and dilute it to the maximum filling level line (max. ✿) with warm water.

Particularly the concentrated softeners must be diluted with warm water; otherwise, the siphon may get clogged in time.

Do not fill the softener above the maximum filling level line; otherwise the excess amount of softener will get mixed with the washing water and you will need to refill the compartment. Do not pour the softener onto the laundry directly since this may cause stains on the garments.

Liquid softener will be dispensed automatically at the final rinsing step of the washing Programme.

(I) Pre-Wash Compartment

Put the powder pre-wash detergent or powder stain remover into the middle compartment with number "I".

You can also put liquid bleach into this compartment while the machine takes in water during pre-wash or first rinsing step. Adding the liquid bleach while the machine takes in water allows it to be diluted before it is poured onto the laundry.

You must select extra rinsing option if you use liquid bleach in a washing Programme. Bleach must be removed from the laundry with rinsing; otherwise it may cause itching on the skin.

INFORMATION

- Read the dosage instructions and label of your garments carefully before using the liquid bleach.

Starch

- Add liquid starch, powder starch or the dyestuff into the softener compartment as instructed on the package.
- Never use fabric softener and starch together in the same washing cycle.
- Wipe the inside of the drum after using starch.

Bleaches

If you are going to use regular bleach in your machine, it is suggested to select a Programme with pre-wash step and add the bleach at the beginning of the pre-wash without putting detergent into the pre-wash compartment. Alternatively, it is suggested to select a Programme with extra rinsing and add the bleach while the machine takes in water from the detergent drawer in the first rinsing step. Bleach should not be mixed with detergent. Since the bleach may cause irritation on skin, little amounts must be used and rinsed thoroughly. Do not pour bleach directly onto the laundry and do not use it with colour laundry.

When using oxygen based bleach, follow the instructions on the package and select a Programme at low temperature. Oxygen based bleach can be used together with the detergent. However, if it is not at the same thickness with the detergent, then it must be added from the compartment number "II" right after the detergent foams with water.

Eliminating lime formation

- When required, use only appropriate lime removers developed specifically for washing machines and always follow the instructions on the package.

4.2.7 Tips for efficient washing

		Clothes			
		Light colours and whites	**Colours**	**Dark colours**	**Delicates/ Woolens/Silks**
		(Recommended temperature range based on soiling level: 40-90ºC)	(Recommended temperature range based on soiling level: cold-40ºC)	(Recommended temperature range based on soiling level: cold-40ºC)	(Recommended temperature range based on soiling level: cold-30ºC)
Soiling Level	**Heavily Soiled** (difficult stains such as grass, coffee, fruits and blood.)	It may be necessary to pre-treat the stains or perform prewash. Powder and liquid detergents recommended for whites can be used at dosages recommended for heavily soiled clothes. It is recommended to use powder detergents to clean clay and soil stains and the stains that are sensitive to bleaches.	Powder and liquid detergents recommended for colours can be used at dosages recommended for heavily soiled clothes. It is recommended to use powder detergents to clean clay and soil stains and the stains that are sensitive to bleaches. Use detergents without bleach.	Liquid detergents suitable for colours and dark colours can be used at dosages recommended for heavily soiled clothes.	Prefer liquid detergents produced for delicate clothes. Woolen and silk clothes must be washed with special woolen detergents.
	Normally Soiled (For example, stains caused by body on collars and cuffs)	Powder and liquid detergents recommended for whites can be used at dosages recommended for normally soiled clothes.	Powder and liquid detergents recommended for colours can be used at dosages recommended for normally soiled clothes. Use detergents without bleach.	Liquid detergents suitable for colours and dark colours can be used at dosages recommended for normally soiled clothes.	Prefer liquid detergents produced for delicate clothes. Woolen and silk clothes must be washed with special woolen detergents.
	Lightly Soiled (No visible stains exist.)	Powder and liquid detergents recommended for whites can be used at dosages recommended for lightly soiled clothes.	Powder and liquid detergents recommended for colours can be used at dosages recommended for lightly soiled clothes. Use detergents without bleach.	Liquid detergents suitable for colours and dark colours can be used at dosages recommended for lightly soiled clothes.	Prefer liquid detergents produced for delicate clothes. Woolen and silk clothes must be washed with special woolen detergents.

4.2.8 Displayed Programme Time

You can see the programme duration on the display of your machine while selecting a programme. Depending on the amount of laundry you have loaded into your machine, foaming, unbalanced load conditions, fluctuations in power supply, water pressure and programme settings, the programme duration is automatically adjusted while the programme is running.

SPECIAL CASE: At programme start of Cottons and Cotton Eco programmes, display shows the duration of half load, which is the most common use case. After programme starts, in 20-25 minutes actual load is detected by the machine. And if the detected load is higher than half load; washing programme will be adjusted accordingly and programme duration increased automatically. You may follow this change on the display.

4.3 Operating the product

4.3.1 Control panel

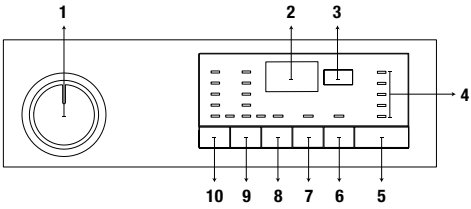

1 - Programme Selection Knob (Uppermost position On / Off)
2 - Display
3 - End Time Adjustment Button
4 - Programme Follow-up Indicator
5 - Start/Pause Button
6 - Auxiliary Function Button 3
7 - Auxiliary Function Button 2
8 - Auxiliary Function Button 1
9 - Spin Speed Adjustment Button
10 - Temperature Adjustment Button

4.3.2 Preparing the machine

1. Make sure that the hoses are connected tightly.
2. Plug in your machine.
3. Turn the tap on completely.
4. Place the laundry in the machine.
5. Add detergent and fabric softener.

4.3.3 Programme selection and tips for efficient washing

1. Select the programme suitable for the type, quantity and soiling degree of the laundry in accordance with the "Programme and consumption table" and the temperature table below.
2. Use the Programme Selection knob to select the desired programme.

4.3.4 Programme and consumption table

EN					Auxiliary functions					
Programme		Max. Load (kg)	Water Consumption (l)	Energy Consumption (kWh)	Max. Speed	Fast+	Prewash	Extra Rinse	AntiCrease+	Temperature
Cottons	90	7	95	2,40	1200	•	•	•	•	Cold-90
	60	7	95	1,80	1200	•	•	•	•	Cold-90
	40	7	93	0,97	1200	•	•	•	•	Cold-90
Eco 40-60	40 ***	7	52	0,840	1200					40-60
	40 **,***	3,5	38	0,540	1200					40-60
	40 ***	2	28	0,290	1200					40-60
	60 **	7	52	0,865	1200					40-60
	60 **	3,5	38	0,550	1200					40-60
Synthetics	60	3	75	1,35	1200	•	•	•	•	Cold-60
	40	3	70	0,85	1200	•	•	•	•	Cold-60
Quick / Super Quick	90	7	66	2,20	1200	•		•	•	Cold-90
	60	7	66	1,20	1200	•		•	•	Cold-90
	30	7	66	0,20	1200	•		•	•	Cold-90
Quick / Super Quick + Fast+	30	2	40	0,15	1200	•		•	•	Cold-90
Mixed Fabrics	40	3,5	83	1,00	800	•	•		•	Cold-40
Hand Wash	40	1,5	62	0,55	1200			•		Cold-40
Delicates	40	3,5	60	0,79	800			•		Cold-40
Sports	40	3,5	58	0,60	1200		•			Cold-40
Dark Care	40	3	88	1,05	1200	•	•	*	•	Cold-40
StainExpert	60	3,5	85	1,70	1200	•	•			30-60
Down Wear	60	2	95	1,40	1000			•		Cold-60
Shirts	60	3	65	1,40	800	•	•	•	•	Cold-60
Anti Allergy	90	7	129	2,90	1200			*		20-90
Drum Clean	90	-	80	2,70	600					90

• : Selectable

* : Automatically selected, cannot be cancelled.

** : Eco 40-60 (40 60) is the test programme in accordance with EN 60456:2016 and energy label with Commission Delegated Regulation (EU) 1061/2010

***: Eco 40-60 with 40 °C temperature selection is the test programme in accordance with EN 60456:2016/prA:2020 and energy label with Commission Delegated Regulation (EU) 2019/2014

- : See the programme description for maximum load.

INFORMATION

- Water and power consumption may vary subject to the changes in water pressure, water hardness and water temperature, ambient temperature, type and amount of laundry, selection of auxiliary functions and spin speed, and changes in the mains voltage.
- When selecting a programme, you can see the washing duration on the display of your machine. Depending on the amount of laundry you have loaded into the machine, there might be a difference of 1 to 1.5 hours between the duration shown on the display and the actual duration of the washing programme. The duration will be corrected automatically right after the washing programme has started.
- The auxiliary functions in the table may vary according to the model of your machine.
- Auxiliary function selection modes can be changed by the manufacturing company. Existing selection modes can be removed or new selection modes can be added.
- Always select the lowest appropriate temperature. The most efficient programmes in terms of energy consumption are generally those that perform at lower temperatures and longer duration.
- Noise and remaining moisture content are influenced by the spinning speed: the higher the spinning speed in the spinning phase, the higher the noise and the lower the remaining moisture content.

Consumption Values (EN)

	Temperature Selection (°C)	Spin Speed (rpm)	Capacity (kg)	Program Duration (hh:mm)	Energy Consumption (kWh/cycle)	Water Consumption(L/cycle)	Laundry Temperature (°C)	Remaining Moisture Content (%)
Eco 40-60	40	1200	7	03:27	0,840	52	34	52
	40	1200	3,5	02:41	0,540	38	34	53
	40	1200	2	02:41	0,290	28	24	56
Cottons	20	1200	7	03:40	0,600	93	20	53
Cottons	60	1200	7	03:40	1,800	95	60	53
Synthetics	40	1200	3	02:25	0,850	70	40	40
Quick / Super Quick	30	1200	7	00:28	0,200	66	23	62

4.3.5 Main programmes

Depending on the type of fabric, use the following main programmes.

• Cottons

You can wash your durable cotton laundry (sheets, bedlinen, towels, bathrobes, underwear etc.) in this programme. When you press the quick wash function key, programme duration becomes notably shorter but effective washing is ensured thanks to intense washing movements. If the quick wash function is not selected, superior washing and rinsing performance is ensured for your heavily soiled laundry.

• Synthetics

You can use this programme to wash t-shirts, synthetic/cotton mix fabrics etc. Programme duration is notably shorter and efficient washing performance is ensured. If the quick wash function is not selected, superior washing and rinsing performance is ensured for your heavily soiled laundry.

• Hand Wash

Use this programme to wash your woollen/ delicate clothes. Select the appropriate temperature complying with the tag of your clothes. Your laundry will be washed with very delicate movements to avoid any damage.

4.3.6 Additional programmes

For special cases, additional programmes are available in the machine.

INFORMATION

- Additional programmes may differ according to the model of the machine.

• Eco 40-60

The eco 40-60 programme is able to clean normally soiled cotton laundry declared to be washable at 40 °C or 60 °C, together in the same cycle, and that this programme is used to assess the compliance with the EU ecodesign legislation.

Although it washes longer than all other programmes, it provides high energy and water savings. Actual water temperature may be different from the stated wash temperature. When you load the machine with less laundry (e.g. ½ capacity or less), periods in programme stages may automatically get shorter. In this case, energy and water consumption will decrease.

• Anti Allergy

Use this programme for laundry that requires an intense, long, anti-allergic and hygienic washing cycle at high temperature. A high level of hygiene is ensured thanks to the long heating and additional rinsing step.

- The programme was tested by the "VDE" institute while the temperature was 20°C, and its efficiency in bacteria and mould elimination was certified.
- The programme has been tested by “The British Allergy Foundation - Allergy UK” while the temperature was 60°C, and its efficiency in eliminating bacteria and mould, as well as allergens, was certified.

Allergy UK is the trademark of the British Allergy Foundation. The Seal of Approval has been designed to provide guidance to persons who want information whether the product significantly decreases the amount of allergens in the environment it is installed or whether it limits/reduces/eliminates the allergens. Its purpose is to provide evidence that the products have been tested scientifically or reviewed to provide measurable results.

• Delicates

You can use this programme to wash delicate laundry such as cotton/synthetic mix knitted clothes or socks. Washing movements in this programme are more delicate. Set the temperature to 20 degrees or use the Cold Wash option for clothes whose colour you wish to preserve.

• Quick / Super Quick

Use this programme to wash your lightly soiled cotton clothes in a short time. The programme duration can be reduced down to 14 minutes when the quick wash function is selected. When the quick wash function is selected, maximum 2 (two) kg of laundry must be washed.

• Dark Care

Use this programme to preserve the colour of your dark-coloured clothes and jeans. This programme provides high efficiency in washing, thanks to a special drum movement, even at low temperatures. It is recommended to use liquid detergent or woollen shampoo for dark coloured laundry. Do not wash your delicate clothes that contain wool etc. in this programme.

• **Mixed Fabrics**

You can use this programme to wash cottons and synthetics together without the need to sort them.

• **Shirts**

Use this programme to wash shirts made of cotton, synthetic and synthetic blended fabrics together. This programme ensures that your clothes wrinkle less. When the quick wash function is selected, the Pre-treatment algorithm is used.

- Apply the pre-treatment chemical directly onto the clothes, or add it together with the detergent when the machine starts to take in water from the main wash compartment. This way, it will take you much shorter to get the performance you would normally get with a regular washing cycle. Life of your shirts will be longer.

• **Sports**

Use this programme to wash outdoor/sports clothes that contain cotton/synthetic mix, as well as waterproof cloths like gore-tex. This programme washes your laundry delicately thanks to its special turning movements.

• **StainExpert**

Your washing machine has a special stain programme ensuring that different types of stains are removed in the most efficient way. Use this programme only to use durable, colourfast cottons. Do not wash delicate or non-colourfast clothes in this programme. You should check the tags of clothing before washing (recommended for shirts, trousers, shorts, t-shirts, baby clothes, pyjamas, aprons, table cloths, bedding, duvet covers, sheets, bath/brach towels, regular towels, socks, and cotton underwear suitable for long washing cycles at a high temperature). With the auto stain programme, you can remove 24 types of stains grouped into two categories according to quick function selection. Here you can see the stain groups based on quick function selection.

Below you will find the stain groups based on the quick function.

When the quick function is selected:	
Blood	Fruit juice
Chocolate	Ketchup
Pudding	Red Wine
Egg	Curry
Tea	Jam
Coffee	Coal

When the quick function is not selected:	
Butter	Food
Grass	Mayonnaise
Mud	Salad Dressing
Coke	Make-up
Sweat	Machine Oil
Collar Soil	Baby food

• Select the stain programme.

• In the stain groups stated above, find the type of stain you want to remove and select the quick auxiliary function selection key to select the relevant group.

• Carefully read the tag of the clothing and make sure that the temperature and spin speed selected are suitable.

• **Down Wear**

Use this programme to wash down coats, vests, jackets etc. that bear a “machine-washable” tag. Thanks to special spin profiles, it is ensured that water reaches the air gaps between feathers.

4.3.7 Special programmes

For specific applications, select any of the following programmes.

• **Rinse**

Use when you want to rinse or starch separately.

• **Spin+Drain**

Use this programme to remove the water on the clothes/in the machine.

Before selecting this programme, select the desired spin speed and press Start/Pause button. First, the machine will drain the water inside of it. Then, it will spin the laundry at the selected spin speed, and drain the water coming off of the laundry.

If you only want to drain the water without spinning the laundry, select the “Spin+Pump programme, and use the Spin Speed Adjustment button to select the No Spin function. Press the Start/Pause button.

INFORMATION

- Use a lower spin speed for delicate laundries.

4.3.8 Temperature selection

Whenever a new programme is selected, the recommended temperature for the selected programme appears on the temperature indicator.

To decrease the temperature, press the Temperature Adjustment button. Temperature will decrease gradually. When the cold level is selected, temperature level lights will not be on.

INFORMATION

- If the programme has not reached the heating step, you can change the temperature without switching the machine to Pause mode.

4.3.9 Spin speed selection

Whenever a new programme is selected, the recommended spin speed of the selected programme is displayed on the spin speed indicator.

To decrease the spin speed, press the Spin Speed Adjustment button. Spin speed decreases gradually. Then, depending on the model of the product, "Rinse Hold" and "No Spin" options appear on the display. When the “No Spin” function is selected, rinse level indicator lights will not be on.

Rinse hold

If you are not going to unload your clothes immediately after the programme ends, you can use rinse hold function to keep your laundry in the final rinsing water in order to prevent them from getting wrinkled when there is no water in the machine. Press Start/Pause button after this process if you want to drain the water without spinning your laundry. Programme will resume where it left off, drain the water and then it will be complete.

If you want to spin the laundry held in water, adjust the Spin Speed and press Start/Pause button. Programme will resume. Water will be drained, laundry will be spun and the programme will end.

INFORMATION

- If the programme has not reached the spin step, you can change the spin speed without switching the machine to Pause mode.

4.3.10 Auxiliary function selection

Select the desired auxiliary functions before starting the programme. You can also select or cancel auxiliary functions suitable for the running programme without pressing the Start/ Pause button while the machine is operating. To do this, the machine must be in a step before the auxiliary function you are going to select or cancel. If the auxiliary function cannot be selected or cancelled, light of the relevant function will flash 3 times to warn the user.

INFORMATION

- If a second auxiliary function conflicting with the first one is selected before starting the machine, the function selected first will be cancelled and the second auxiliary function selection will remain active.
- An auxiliary function which is not compatible with the programme cannot be selected. (See "Programme and consumption table")
- Auxiliary Function buttons may vary according to the model of the machine.

4.3.10.1 Auxiliary functions

• Prewash

A Prewash is only worthwhile for heavily soiled laundry. Not using the Prewash will save energy, water, detergent and time.

INFORMATION

- Prewash without detergent is recommended for tulle and curtains.

• Fast+

When this function is selected, durations of relevant programmes get shorter by 50%.

Thanks to the optimised washing steps, high mechanic activity and optimum water consumption, high washing performance is achieved in spite of the reduced duration.

• Extra Rinse

This function enables the machine to carry out another rinsing cycle in addition to the one carried out after the main wash. Thus, the risk for sensitive skins (babies, allergic skins, etc.) to be effected by the minimal detergent remnants on the laundrwy can be reduced.

4.3.10.2 Functions/Programmes Selected by Pressing the Function Buttons for 3 Seconds

• Drum Clean 3"

To select this programme, press and hold the auxiliary function button 1 for 3 seconds.

Use it regularly (every 1-2 months) to clean the drum and ensure the required hygiene is provided. Run the programme while the machine is totally empty. To obtain better results, put powder lime-scale remover for washing machines into the detergent compartment no. “2”. When the programme is over, leave the loading door ajar so that the inside of the machine gets dry.

INFORMATION

- This is not a washing programme. It is a maintenance programme.
- Do not run this programme when there are any objects in the machine. If you try to do so, the machine will automatically detect that there is load inside and abort the programme.

• Child Lock

You can prevent children from tampering with the machine by using the Child Lock feature. Thus you can avoid any changes in a running programme.

INFORMATION

- If the Programme Selection knob is turned when the Child Lock is enabled, "Con" appears on the display. While the Child Lock is enabled, you cannot make any change in the programmes, the selected temperature, the speed or the auxiliary functions.
- Even if another programme is selected with the Programme Selection knob while the Child Lock is enabled, previously selected programme will continue running.

To enable Child Lock:

Press and hold the Auxiliary Function button 2 for 3 seconds. While you’re holding the button pressed for 3 seconds, C03, C02 and C01 will be displayed respectively.Then, “Con” will be displayed to warn the user that child lock is enabled.If you press any button or turn the Programme Selection knob while the Child Lock is enabled, the same warning will be displayed.

To disable Child Lock:

Press and hold the Auxiliary Function button 2 for 3 seconds while the programme is running. While you’re holding the button pressed for 3 seconds, C03, C02 and C01 will be displayed respectively. Then, “COF” will be displayed to warn the user that child lock is disabled.

INFORMATION

- In addition to the method above, to deactivate the Child Lock, switch the Programme Selection knob to On/Off position when no programme is running, and select another programme.
- Child Lock will not be disabled after a power failure or unplugging.

• AntiCrease+ 3"

If you press and hold the auxiliary function button 3 for 3 seconds, this function will be selected and the programme follow-up light of the relevant programme will turn on. When this function is selected, the drum will rotate for up to eight hours to ensure that the clothes do not crease at the end of the programme. At any time during these eight hours, you can cancel the programme and unload the machine. Just press any button or turn the programme selection knob to end the function. The programme follow-up light will remain on even if you end the function by pressing any button. If you end the function by turning the programme selection knob, the programme follow-up light will remain on or go off depending on the selected programme. If you do not cancel the function by pressing the Auxiliary Function button 3 for 3 seconds, it will be used in the next washing cycles as well.

4.3.11 End Time Adjustment

The End Time Adjustment function allows you to set the end time of the programme up to 19 hours. You can increase this time by 1-hour intervals.

INFORMATION

- Please do not use liquid detergent if you have selected the End Time Adjustment function. Stains might remain on the clothes.

1. Open the loading door, place the laundry and add detergent, etc.
2. Select the washing programme, temperature, spin speed and, if required, the auxiliary functions.
3. Press the End Time Adjustment button and select the desired time.
4. Press the Start/Pause button. The delayed end time you have set will be displayed. Countdown will start for delayed end. On the display, "_" will move up and down next to the delayed end time.

INFORMATION

- If the programme has not started, you can add laundry into the machine during the delayed end time.

5. At the end of the countdown, duration of the selected programme will be displayed. "_" will disappear and the selected programme will start.

Changing the delayed end time

If you want to change the time during countdown: Turn the programme selection knob to cancel the delayed end time function, and then set the desired time again.

1. Press the End Time Adjustment button. When pressed for the first time, the programme duration will be rounded up to the closest whole number time. Each following press will increase the time by an hour.
2. If you want to decrease the delayed end time, press the End Time Adjustment button consecutively until the desired time is displayed.

Cancelling the delayed end function

If you want to cancel the delayed end time countdown and start the programme immediately:

1. Set the Programme Selection knob to any programme. This way, the Delayed End time will be cancelled. The End/Cancel light will flash continuously.
2. Then, select the programme you want to run again.
3. Press Start/Pause button to start the programme.

4.3.12 Starting the programme

1. Press Start/Pause button to start the programme.
2. Programme follow-up light showing the startup of the programme will turn on.

INFORMATION

- If no programme is started or no key is pressed within 10 minutes during the programme selection process, the display lights will go off. Once the Programme Selection knob is turned or any button is pressed, display lights will turn on again.

4.3.13 Progress of programme

Progress of a running programme can be followed from the Programme Follow-up indicator. At the beginning of each programme step, the relevant indicator light will turn on.

INFORMATION

- If the "Anti-crease+" auxiliary function has been selected, "End" LED and "Anti-crease+" LED will be on at the same time while this step is continuing.
- To end the programme while the "Anti-crease+" step is running, simply press any button or turn the programme selection knob.

You can change the auxiliary functions, speed and temperature settings without stopping the programme flow while the programme is running. To do this, the change you are going to make must be something that will be carried out after the programme step that is running. If the change is not suitable, relevant lights will flash 3 times.

INFORMATION

- If the machine does not proceed to the spinning step, the Rinse Hold function might be active or the automatic unbalanced load detection system might be activated due to the unbalanced distribution of the laundry in the machine.

4.3.14 Loading door lock

There is a locking system on the loading door of the machine that prevents opening of the loading door in cases when the water level is unsuitable.

Loading door light will start flashing when the machine is switched to Pause mode. The machine checks the level of the water inside. If the level is suitable, the loading door light will turn off and the loading door can be opened within 1-2 minutes.

If the level is unsuitable, the loading door light will remain on and the loading door cannot be opened. If you are obliged to open the loading door while the Loading Door light is on, you must cancel the current programme. See "Cancelling the programme"

Opening the loading door in case of power failure:

INFORMATION

- In case of a power failure, you can use the loading door emergency handle under the pump filter lid to manually open the loading door.

WARNING!

- Before opening the loading door, make sure that there is no water in the machine to avoid flooding. Water may be hot and could cause scalding.

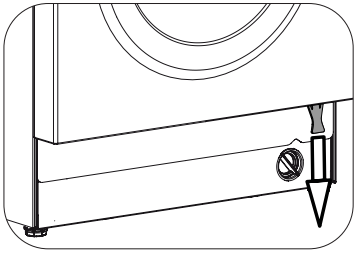

- Turn off and unplug the appliance.
- Open the loading door by pulling the loading door emergency handle downwards.
- Try to pull the handle downwards again if the loading door is not opened.

4.3.15 Changing the selections after programme has started

Switching the machine to pause mode

Press the Start/Pause to switch the machine to pause mode while a programme is running. The light of the current programme will flash on the Programme Follow-up indicator, indicating that the machine has switched to pause mode.

Also, when the loading door is ready to be opened, the Loading Door light will turn off in addition to the programme step light.

Changing the auxiliary function, speed and temperature

Depending on the step the programme has reached, you can cancel or select auxiliary functions. See “Auxiliary function selection”.

You can also change the speed and temperature settings. See "Spin speed selection" and "Temperature selection".

INFORMATION

- If no change is allowed, the relevant light will flash 3 times.

Adding and removing laundry

1. Press the “Start/Pause” button to pause the machine. The programme follow-up light of the relevant step during which the machine was switched into the pause mode will flash.
2. Wait until the Loading Door can be opened.
3. Open the loading door and add or take out laundry.
4. Close the loading door.
5. Make changes in auxiliary functions, temperature and speed settings if necessary.
6. Press the “Start/Pause” button to start the machine.

4.3.16 Cancelling the programme

To cancel the programme, turn the Programme Selection knob to select another programme. Previous programme will be cancelled. End/ Cancel light will flash continuously to notify that the programme has been cancelled.

When you turn the Programme Selection knob, the machine will end the programme but will not discharge the water inside. When you select and start a new programme, the newly selected programme will start depending on the step the previous programme was cancelled in. For example, the machine may take in additional water or continue to wash with the water inside.

INFORMATION

- Depending on the step where the programme was cancelled in, you may have to add detergent and softener again for the programme you have selected anew.

4.3.17 End of programme

At the end of the programme, “End” will be displayed.

1. Wait until the light of the loading door goes off completely.
2. Switch the programme selection knob to On/Off to switch off the machine.
3. Take out your laundry and close the loading door. Your machine is now ready for the next washing cycle.

4.3.18 Your machine has the "Pause Mode" function.

After using the On/Off button to switch on the machine, if you do not start any programme in the selection step or do not perform anything else, or if you do not do anything in 10 minutes after the selected programme has ended, the machine will automatically switch to energy saving mode. Also, if your product has a display that shows programme time, this display will completely turn off. If you turn the Programme Selection knob or touch any button, the lights and the display will switch back to the previous position. The selections you make when exiting the energy efficiency mode may change. Check if your selections are correct before starting the programme. If necessary, make adjustments again. This is not an error.

4.4 Maintenance and cleaning

Service life of the product extends and frequently faced problems decrease if cleaned at regular intervals.

4.4.1 Cleaning the detergent drawer

Remove any powder residue buildup in the drawer. To do this;

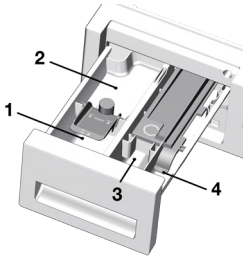

a. You can remove the detergent drawer by pulling it towards yourself strongly.

INFORMATION

- If more than a normal amount of softener and liquid detergent mixture starts to remain in the softener compartment, the siphon must be cleaned.

b. Wash the drawer and the siphon with plenty of lukewarm water in a washbasin. Wear protective gloves or use an appropriate brush to avoid touching the residues in the drawer when cleaning.

c. Replace the drawer into its housing after cleaning. Check if the siphon is in its original location.

4.4.2 Cleaning the loading door and the drum

For products with drum cleaning programme, please see Operating the product - Programmes.

INFORMATION

- Repeat Drum Cleaning process in every 2 months.
- Use an anti-limescale suitable for the washing machines.

After every washing make sure that no foreign substance is left in the drum.

If the holes on the bellow shown in the figure is blocked, open the holes using a toothpick.

INFORMATION

- Foreign metal substances will cause rust stains in the drum. Clean the stains on the drum surface by using cleaning agents for stainless steel. Never use steel wool or wire wool.

WARNING

- Never use sponge or scrub materials. These will damage the painted and plastic surfaces.

4.4.3 Cleaning the body and control panel

Wipe the body of the machine with soapy water or non-corrosive mild gel detergents as necessary, and dry with a soft cloth.

Use only a soft and damp cloth to clean the control panel.

4.4.4 Cleaning the water intake filters

There is a filter at the end of each water intake valve at the rear of the machine and also at the end of each water intake hose where they are connected to the tap. These filters prevent foreign substances and dirt in the water to enter the washing machine. Filters should be cleaned as they do get dirty.

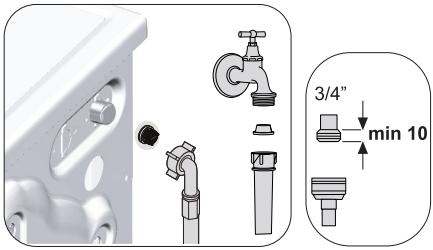

1. Close the taps.

2. Remove the nuts of the water intake hoses to access the filters on the water intake valves. Clean them with an appropriate brush. If the filters are too dirty, take them out by means of pliers and clean them.
3. Take out the filters on the flat ends of the water intake hoses together with the gaskets and clean thoroughly under running water.
4. Replace the gaskets and filters carefully in their places and tighten the hose nuts by hand.

4.4.5 Draining remaining water and cleaning the pump filter

The filter system in your machine prevents solid items such as buttons, coins and fabric fibers clogging the pump impeller during discharge of washing water. Thus, the water will be discharged without any problem and the service life of the pump will extend.

If the machine fails to drain water, the pump filter is clogged. Filter must be cleaned whenever it is clogged or in every 3 months. Water must be drained off first to clean the pump filter.

In addition, prior to transporting the machine (e.g., when moving to another house) and in case of freezing of the water, water may have to be drained completely.

WARNING

- Foreign substances left in the pump filter may damage your machine or may cause noise problem.

In order to clean the dirty filter and discharge the water:

1. Unplug the machine to cut off the supply power.

WARNING

- Temperature of the water inside the machine may rise up to 90 ºC. To avoid burning risk, filter must be cleaned after the water in the machine cools down.

2. Some of our products have emergency draining hose and some does not have. Follow the steps below to discharge the water.

Discharging the water when the product has an emergency draining hose:

a. Pull the emergency draining hose out from its seat
b. Place a large container at the end of the hose. Drain the water into the container by pulling out the plug at the end of the hose. When the container is full, block the inlet of the hose by replacing the plug. After the container is emptied, repeat the above procedure to drain the water in the machine completely.
c. When draining of water is finished, close the end by the plug again and fix the hose in its place.
d. Turn the pump filter to take it out.

3. Clean any residues inside the filter as well as fibers, if any, around the pump impeller region.
4. Install the filter.
5. If the filter cap is composed of two pieces, close the filter cap by pressing on the tab. If it is one piece, seat the tabs in the lower part into their places first, and then press the upper part to close.

5 Troubleshooting

Programmes do not start after the loading door is closed.

- Start / Pause / Cancel button is not pressed. >>>Press Start / Pause / Cancel button.
- It may be difficult to close the loading door in case of excessive loading. >>>Reduce the amount of laundry and make sure that the loading door is closed properly.

Programme cannot be started or selected.

- The product has switched to self protection mode due to a supply problem (line voltage, water pressure, etc.). >>> To cancel the programme, turn the Programme Selection knob to select another programme. Previous programme will be cancelled (see. “Cancellation of programme”).

Water inside the product.

- Some water has remained in the product due to the quality control processes in the production. >>>This is not a failure; water is not harmful to the product.

The product does not take water in.

- Tap is turned off. >>>Turn on the taps.
- Water inlet hose is bent. >>>Flatten the hose.
- Water inlet filter is clogged. >>>Clean the filter.
- Loading door is not closed. >>>Close the door.

The product does not drain water.

- Water drain hose is clogged or twisted. >>>Clean or flatten the hose.
- Pump filter is clogged. >>> Clean the pump filter.

Product vibrates or makes noise.

- Product is standing unbalanced. >>>Stable the product by adjusting the feet.
- A hard substance has entered into the pump filter. >>>Clean the pump filter.
- Transportation safety bolts are not removed. >>>Remove the transportation safety bolts.
- Laundry quantity in the product is too little. >>>Add more laundry to the product.
- Excessive laundry is loaded in the product. >>>Take out some of the laundry from the product or distribute the load by hand to balance it homogeneously in the product.
- Product is leaning on a rigid item. >>>Make sure that the product is not leaning on anything.

There is water leaking from the bottom of the product.

- Water drain hose is clogged or twisted. >>>Clean or flatten the hose.
- Pump filter is clogged. >>>Clean the pump filter.

Product stopped shortly after the programme started.

- Machine has stopped temporarily due to low voltage. >>>Product will resume running when the voltage restores to the normal level.

Product directly drains the water it takes in.

- Draining hose is not at adequate height. >>>Connect the water draining hose as described in the user manual.

No water can be seen in the product during washing.

- Water is inside the invisible part of the product. >>>This is not a failure.

Loading door cannot be opened.

- Loading door lock is activated because of the water level in the product. >>>Drain the water by running the Pump or Spin programme.
- Product is heating up the water or it is at the spinning cycle. >>> Wait until the programme completes.
- Loading door may be stuck because of the pressure it is subjected to. >>>Grab the handle and push and pull the loading door to release and open it.
- If there is no power, loading door of the product will not open. >>>To open the loading door, open the pump filter cap and pull down the emergency handle positioned at the rear side of the said cap. See "Loading door lock"

Washing takes longer than specified in the user manual.(*)

- Water pressure is low. >>>Product waits until taking in adequate amount of water to prevent poor washing quality due to the decreased amount of water. Therefore, the washing time extends.
- Voltage is low. >>>Washing time is prolonged to avoid poor washing results when the supply voltage is low.
- Input temperature of water is low. >>>Required time to heat up the water extends in cold seasons. Also, washing time can be lengthened to avoid poor washing results.
- Number of rinses and/or amount of rinse water have increased. >>>Product increases the amount of rinse water when good rinsing is needed and adds an extra rinsing step if necessary.
- Excessive foam has occurred and automatic foam absorption system has been activated due to too much detergent usage. >>> Use recommended amount of detergent.

Programme time does not countdown. (On models with display) (*)

- Timer may stop during water intake. >>>Timer indicator will not countdown until the product takes in adequate amount of water. The product will wait until there is sufficient amount of water to avoid poor washing results due to lack of water. Timer indicator will resume countdown after this.
- Timer may stop during heating step. >>>Timer indicator will not countdown until the product reaches the selected temperature.
- Timer may stop during spinning step. >>>Automatic unbalanced load detection system is activated due to the unbalanced distribution of the laundry in the product.

Programme time does not countdown. (*)

- There is unbalanced load in the product. >>>Automatic unbalanced load detection system is activated due to the unbalanced distribution of the laundry in the product.

Product does not switch to spinning step. (*)

- There is unbalanced load in the product. >>>Automatic unbalanced load detection system is activated due to the unbalanced distribution of the laundry in the product.
- The product will not spin if water is not drained completely. >>>Check the filter and the draining hose.
- Excessive foam has occurred and automatic foam absorption system has been activated due to too much detergent usage. >>> Use recommended amount of detergent.

Washing performance is poor: Laundry turns gray. (**)

- Insufficient amount of detergent has been used over a long period of time. >>>Use the recommended amount of detergent appropriate for water hardness and the laundry.
- Washing has been made at low temperatures for a long time. >>>Select the proper temperature for the laundry to be washed.
- Insufficient amount of detergent is used with hard water. >>>Using insufficient amount of detergent with hard water causes the soil to stick on the cloth and this turns the cloth into gray in time. It is difficult to eliminate graying once it happens. Use the recommended amount of detergent appropriate for water hardness and the laundry.
- Excessive amount of detergent is used. >>>Use the recommended amount of detergent appropriate for water hardness and the laundry.

Washing performance is poor: Stains persist or the laundry is not whitened. (**)

- Insufficient amount of detergent is used. >>>Use the recommended amount of detergent appropriate for water hardness and the laundry.
- Excessive laundry is loaded in. >>>Do not load the product in excess. Load with amounts recommended in the "Programme and consumption table".
- Wrong programme and temperature were selected. >>>Select the proper programme and temperature for the laundry to be washed.
- Wrong type of detergent is used. >>>Use original detergent appropriate for the product.
- Excessive amount of detergent is used. >>>Put the detergent in the correct compartment. Do not mix the bleaching agent and the detergent with each other.

Washing performance is poor: Oily stains appeared on the laundry. (**)

- Regular drum cleaning is not applied. >>>Clean the drum regularly. For this procedure, please see "Cleaning the loading door and the drum".

Washing performance is poor: Clothes smell unpleasantly. (**)

- Odours and bacteria layers are formed on the drum as a result of continuous washing at lower temperatures and/or in short programmes. >>>Leave the detergent drawer as well as the loading door of the product ajar after each washing. Thus, a humid environment favorable for bacteria cannot occur in the machine.

Colour of the clothes faded. (**)

- Excessive laundry was loaded in. >>>Do not load the product in excess.
- Detergent in use is damp. >>> Keep detergents closed in an environment free of humidity and do not expose them to excessive temperatures.
- A higher temperature was selected. >>>Select the proper programme and temperature according to the type and soiling degree of the laundry.

Washing machine does not rinse well.

- The amount, brand and storage conditions of the detergent used are inappropriate. >>>Use a detergent appropriate for the washing machine and your laundry. Keep detergents closed in an environment free of humidity and do not expose them to excessive temperatures.
- Detergent was put in the wrong compartment. >>>If detergent is put in the prewash compartment although prewash cycle is not selected, the product can take this detergent during rinsing or softener step. Put the detergent in the correct compartment.
- Pump filter is clogged. >>>Check the filter.
- Drain hose is folded. >>>Check the drain hose.

Laundry became stiff after washing. (**)

- Insufficient amount of detergent is used. >>>Using insufficient amount of detergent for the water hardness can cause the laundry to become stiff in time. Use appropriate amount of detergent according to the water hardness.
- Detergent was put in the wrong compartment. >>>If detergent is put in the prewash compartment although prewash cycle is not selected, the product can take this detergent during rinsing or softener step. Put the detergent in the correct compartment.
- Detergent was mixed with the softener. >>>Do not mix the softener with detergent. Wash and clean the drawer with hot water.

Laundry does not smell like the softener. (**)

- Detergent was put in the wrong compartment. >>>If detergent is put in the prewash compartment although prewash cycle is not selected, the product can take this detergent during rinsing or softener step. Wash and clean the drawer with hot water. Put the detergent in the correct compartment.
- Detergent was mixed with the softener. >>>Do not mix the softener with detergent. Wash and clean the drawer with hot water.

Detergent residue in the detergent drawer. (**)

- Detergent was put in wet drawer. >>>Dry the detergent drawer before putting in detergent.
- Detergent has gotten damp. >>>Keep detergents closed in an environment free of humidity and do not expose them to excessive temperatures.
- Water pressure is low. >>>Check the water pressure.
- The detergent in the main wash compartment got wet while taking in the prewash water. Holes of the detergent compartment are blocked. >>>Check the holes and clean if they are clogged.
- There is a problem with the detergent drawer valves. >>>Call the Authorised Service Agent.
- Detergent was mixed with the softener. >>>Do not mix the softener with detergent. Wash and clean the drawer with hot water.
- Regular drum cleaning is not applied. >>>Clean the drum regularly. For this procedure, please see "Cleaning the loading door and the drum".

Too much foam forms inside the product. (**)

- Improper detergents for the washing machine is used. >>>Use detergents appropriate for the washing machine.
- Excessive amount of detergent is used. >>>Use only sufficient amount of detergent.
- Detergent was stored under improper conditions. >>>Store detergent in a closed and dry location. Do not store in excessively hot places.
- Some meshed laundry such as tulle may foam too much because of their texture. >>>Use smaller amounts of detergent for this type of item.
- Detergent was put in the wrong compartment. >>>Put the detergent in the correct compartment.
- Softener is being taken early by the product. >>>There may be problem in the valves or in the detergent drawer. Call the Authorised Service Agent.

Foam is overflowing from the detergent drawer.

- Too much detergent is used. >>>Mix 1 tablespoonful softener and ½ l water and pour into the main wash compartment of the detergent drawer.

  >>>Put detergent into the product suitable for the programmes and maximum loads indicated in the "Programme and consumption table". When you use additional chemicals (stain removers, bleaches and etc.), reduce the amount of detergent.

Laundry remains wet at the end of the programme. (*)

- Excessive foam has occurred and automatic foam absorption system has been activated due to too much detergent usage. >>>Use recommended amount of detergent.

(*) The product does not switch to spinning step when the laundry is not evenly distributed in the drum to prevent any damage to the product and to its surrounding environment. Laundry should be rearranged and re-spun.

(**) Regular drum cleaning is not applied. Clean the drum regularly. See 4.4.2

WARNING

- If you cannot eliminate the problem although you follow the instructions in this section, consult your dealer or the Authorised Service Agent. Never try to repair a nonfunctional product yourself.

6 BUILT-IN INSTALLATION

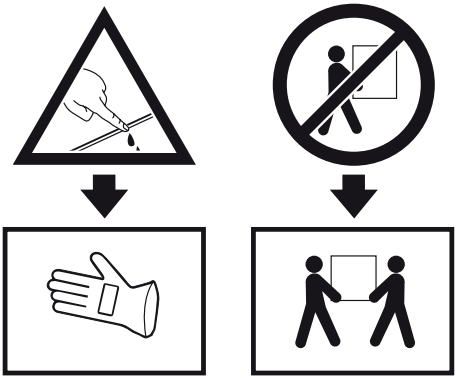

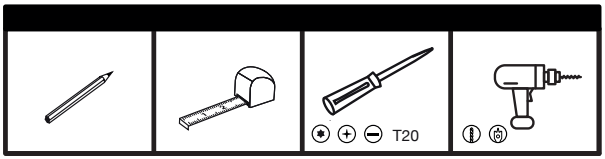

a	b	c	d	e
x8	x6	x2	x2	x2
Ø 4 x 16mm	M 5 x 10mm			

1

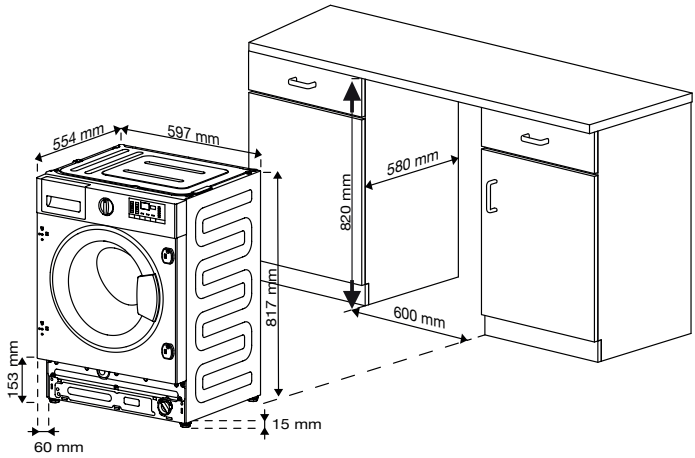

2

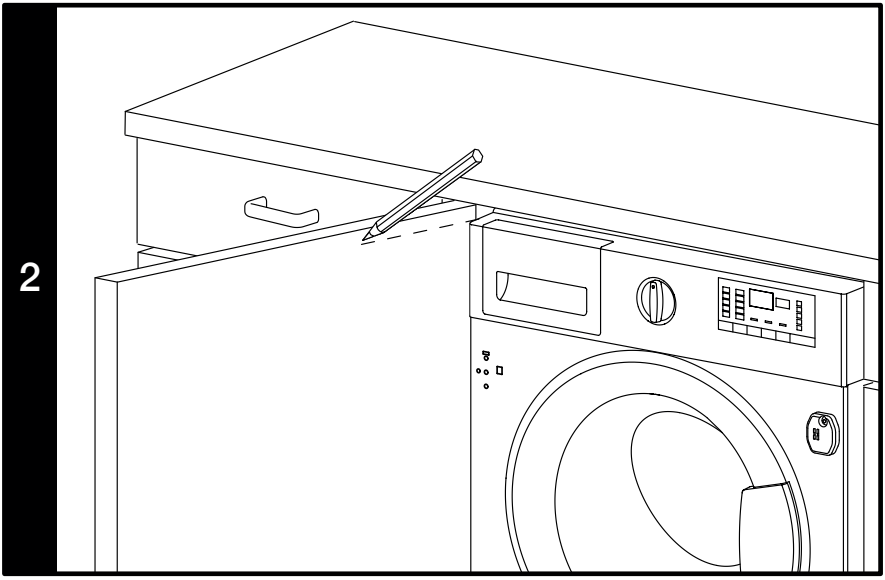

3

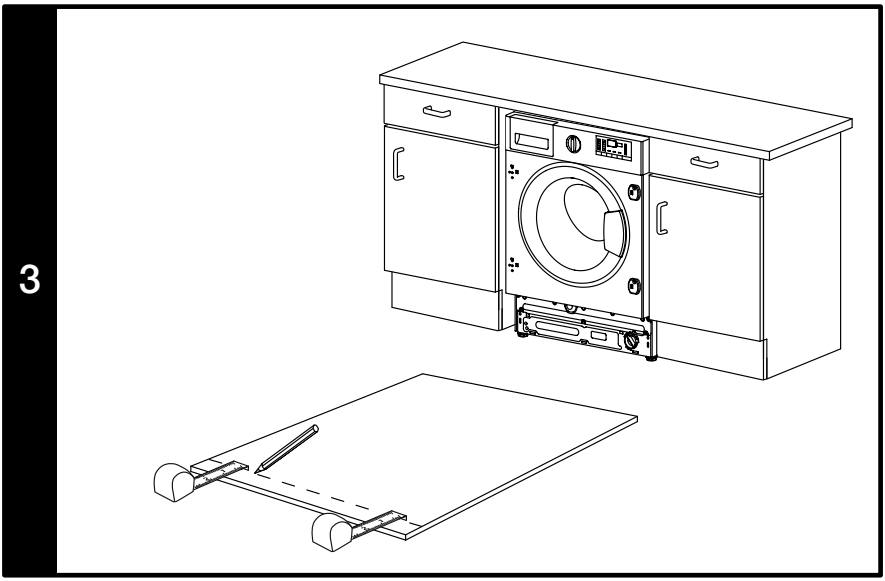

4

L

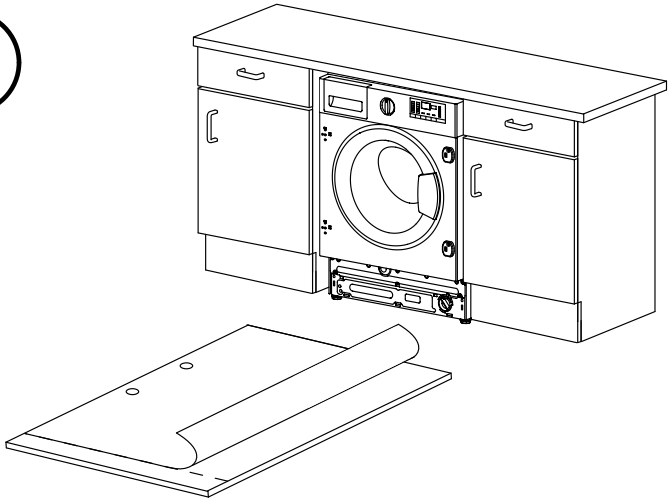

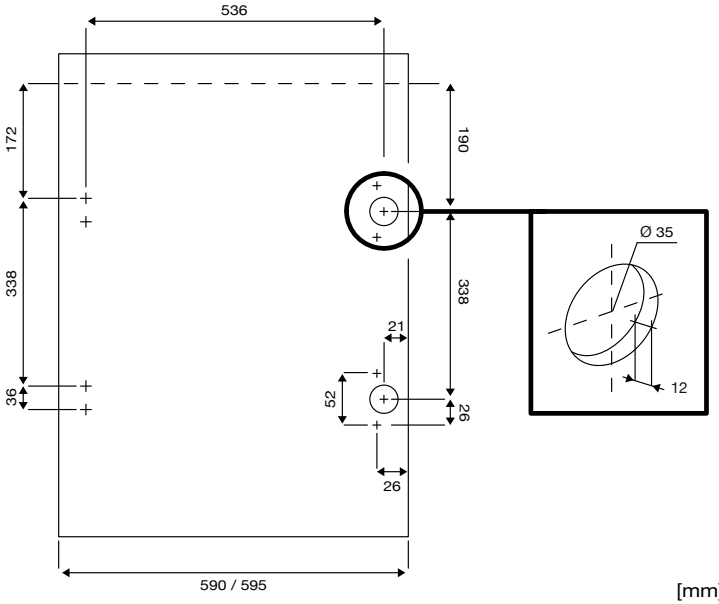

4

R

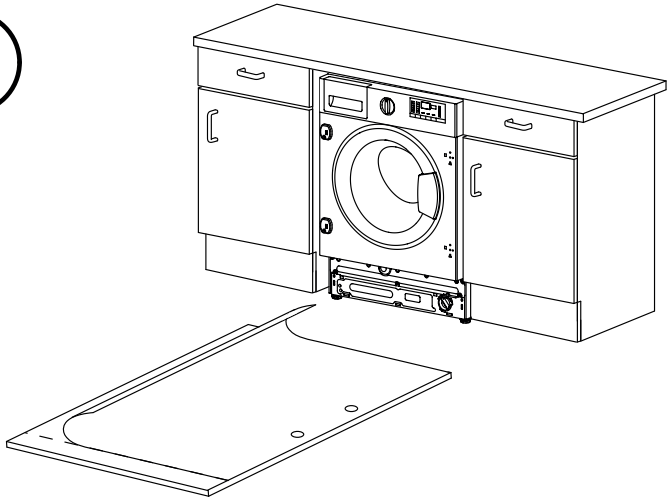

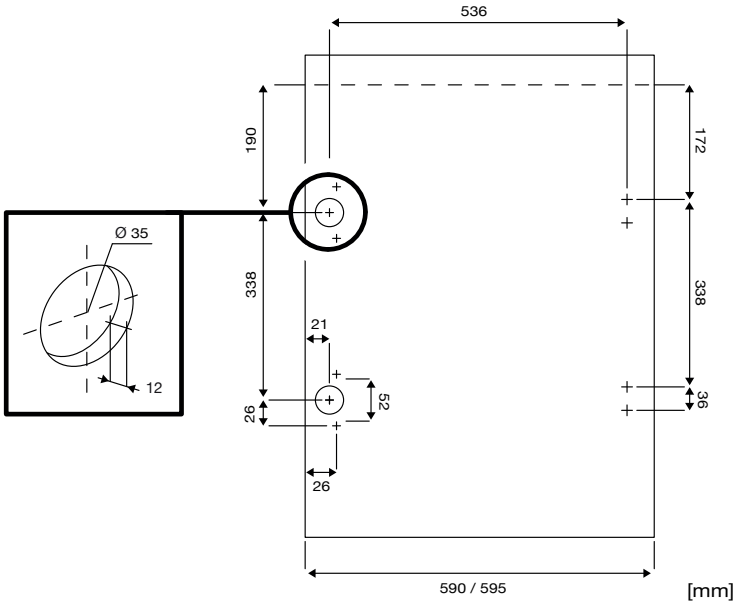

5

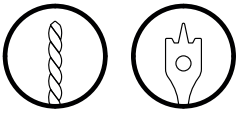

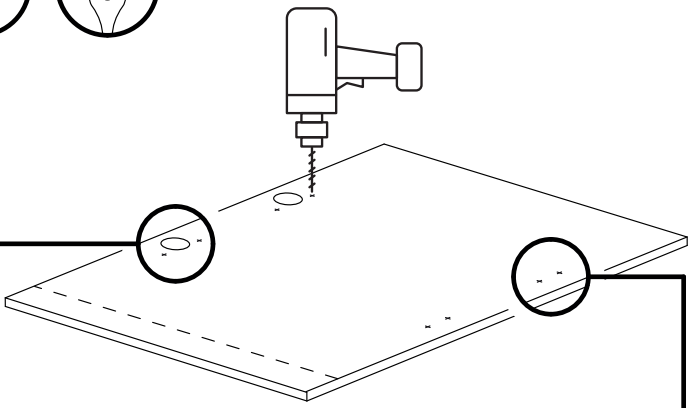

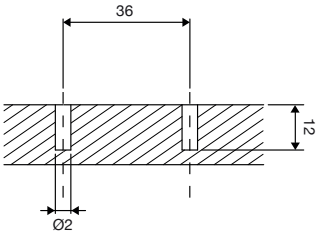

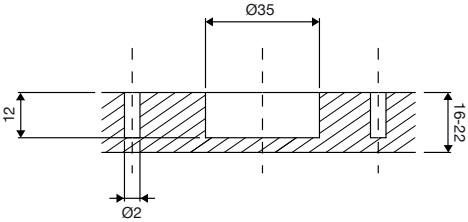

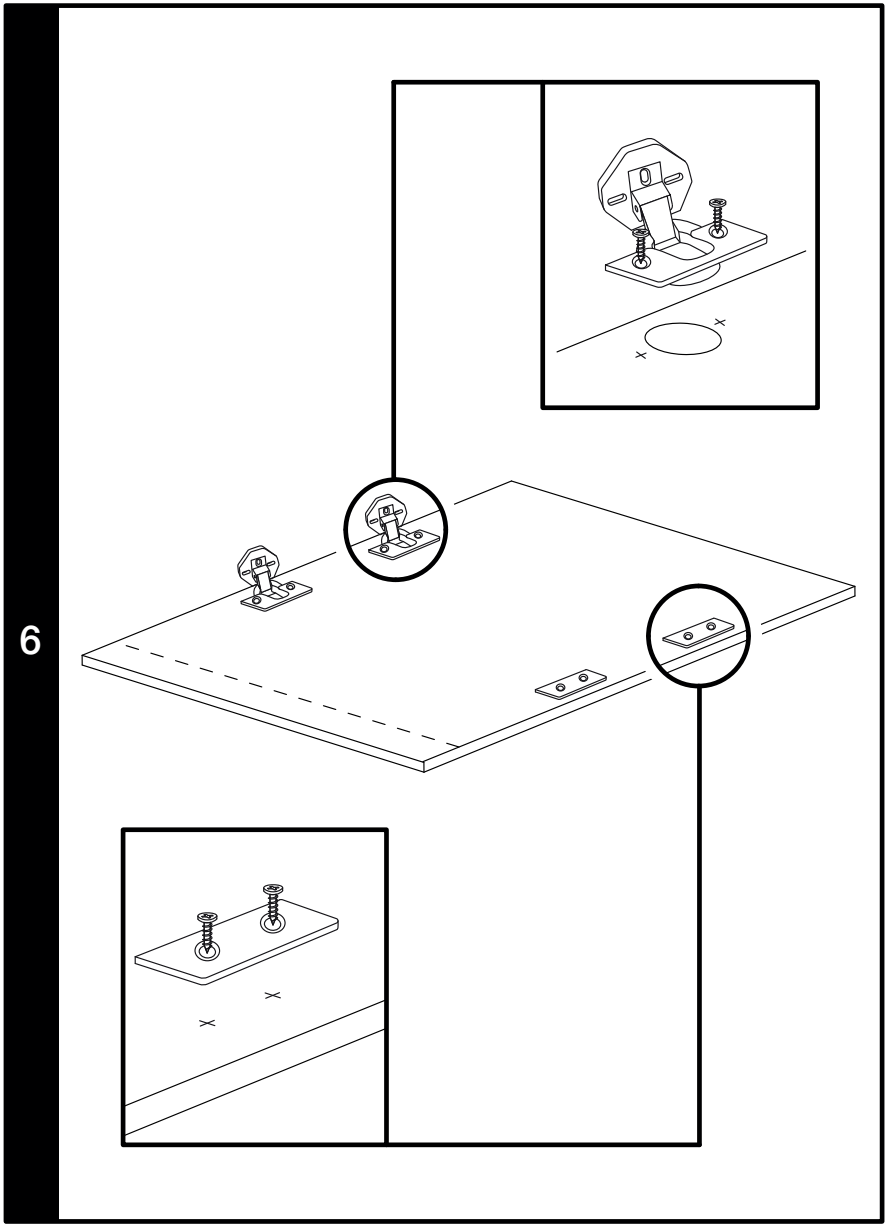
6

7

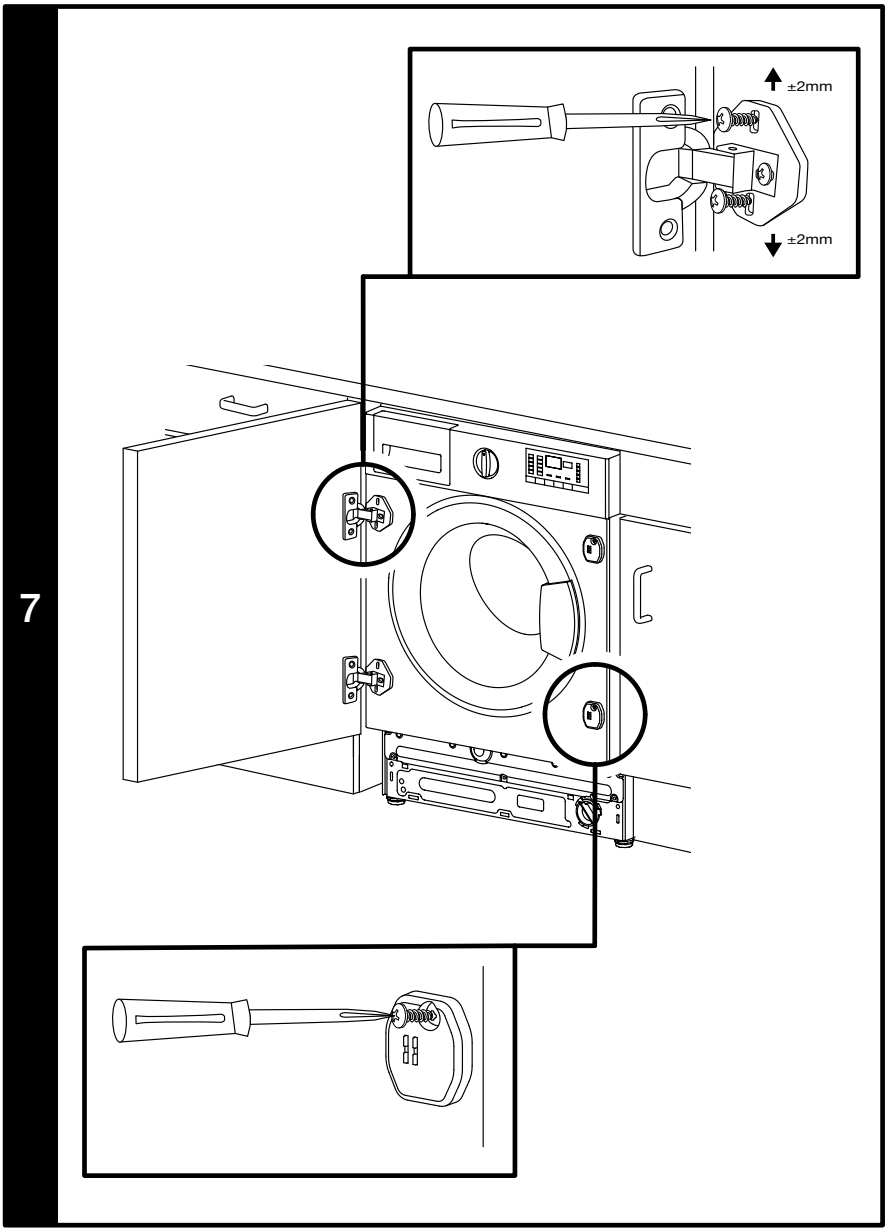

BEKO UK AND IRELAND STANDARD MANUFACTURER GUARANTEE TERMS AND CONDITIONS

Your new Beko product is guaranteed against faulty materials, defective components or manufacturing defects.

The standard guarantee starts from the date of original purchase of the product, and lasts for a period of twelve (12) months unless Beko plc (the "Manufacturer") agrees to extend the guarantee for the product in writing.

If you have purchased an American style Fridge freezer, the standard guarantee starts from the date of original purchase of the product, and lasts for a period of twenty four (24) months unless Beko plc (the "Manufacturer") agrees to extend the guarantee for the product in writing.

If you have any questions about the guarantee on your product (including how long it is valid), please contact your retailer or our contact centre on **0333 207 9710** (UK and Northern Ireland) or **01 862 3411** (Republic of Ireland)

This guarantee does not in any way diminish or affect your statutory rights in connection with the product. This guarantee is in addition to your statutory rights as a consumer. If you have any questions about these rights, please contact the retailer from which you purchased the product. In certain circumstances, it is possible that your statutory rights may offer additional or higher levels of protection than those offered under the terms of this guarantee.

What is covered by this guarantee?

- Repairs to the product required as a result of faulty materials, defective components or manufacturing defects.
- Functional replacement parts to repair a product.
- The costs of a Beko Approved Engineer to carry out the repair.

What is not covered?

- Transit and delivery damage.
- Cabinet or appearance parts, including but not limited to control knobs, flaps and handles.
- Accessories and/or consumable items including but not limited to ice trays, scrapers, cutlery baskets, filters and light bulbs.
- Repairs necessary as a direct or indirect result of:
  - Accidental damage, misuse or abuse of a product.
  - An attempted repair of a product by anyone other than a Beko Approved Engineer (the "Engineer").
  - Installation or use of a product where such installation or use fails to meet the requirements contained in this guarantee or the User Instructions Booklet.
- Repairs to a product operated at any time on commercial or non-residential household premises (unless we have previously agreed to the installation environment).

This guarantee is limited to the cost of repairing the product. To the extent permitted by law, the Manufacturer does not accept and will not be held liable for any financial loss incurred in connection with the failure of any product to operate in accordance with the expected standards. Such financial loss includes but is not limited to loss arising from:

- Time taken off work.
- Damaged food, clothing or other items.
- Meals taken at restaurants or from takeaways.
- General compensation for inconvenience.

Important Notes

1. Your product is designed and built for domestic household use only.
2. The guarantee will automatically be void if the product is installed or is used in commercial or non-residential domestic household premises, unless we have previously agreed to the installation environment.
3. The product must be correctly installed, located and operated in accordance with the instructions contained in the User Instructions Booklet provided with your product.
4. Professional installation by a qualified Electrical Domestic Appliance Installer is recommended for all Washing Machines, Dishwashers and Electric Cookers (as incorrect installation may result in you having to pay for the cost of repairing the product).
5. Gas Cookers must be professionally installed by a Gas Safe (or Gas Networks Ireland for Republic of Ireland) registered gas installer.
6. This guarantee is given in respect of products purchased and used within the United Kingdom and the Republic of Ireland.
7. This guarantee is effective from the initial date of purchase of a new product from an authorised retailer and will be void if the product is resold.
8. This guarantee does not apply to graded sales (where the product is purchased as a "second").
9. Possession of a copy of these terms and conditions does not necessarily mean that a product has the benefit of this guarantee. If you have any questions, please call our Call Centre on the number set out above.
10. The Manufacturer reserves the right to terminate the guarantee if its staff or representatives are subjected to physical or verbal abuse in the course of carrying out their duties.
11. Optional extras, where available (i.e. extendable feet) are supplied on a chargeable basis only.

Does Beko offer replacements?

This is a repair-only guarantee. On occasion, the Manufacturer may at its sole discretion, replace your product with a new product instead of carrying out a repair. Where a replacement is offered, this would normally be an identical model but when this is not possible, a model of similar specification will be provided. The Manufacturer will cover the costs and arrange for the delivery of the new product and for the return of the old product. Any costs related to disconnecting the faulty product and installing the replacement product will not be borne by the Manufacturer unless previously agreed to in writing. The original guarantee will continue to apply to the replacement product; the new product will not come with a new guarantee.

When will the repair take place?

Our Engineers work Monday to Friday 9.00am to 5.00pm. Appointments outside these hours may be possible at the sole discretion of the Manufacturer but cannot be guaranteed. Whilst our Engineers will endeavour to minimize inconvenience and to meet requests for specific timed appointments, this cannot be guaranteed. We will not be liable for delays or if it is unable to carry out a repair because a convenient appointment cannot be arranged.

Will there be any charge for the repairs?

It is your responsibility to provide evidence to the Engineer that your product is covered by this guarantee with a proof of purchase. The Manufacturer reserves the right to charge for the reasonable cost of any service call if:

- You cannot provide evidence that your product is covered by this guarantee.
- Where a service call has been made and the engineer finds that there is no fault with your product.
- That your product has not been installed or operated in accordance with the User Instructions Booklet.
- That the fault was caused by something other than faulty materials, defective components or manufacturing defects.
- For missed appointments.

Payment of these costs are due immediately upon the Engineer providing you with an invoice. The Manufacturer reserves the right to terminate the guarantee if you fail to pay the costs for the service call in a timely manner.

If you are a resident of the United Kingdom, this guarantee will be governed by English law and subject to the English Courts, save where you live in another part of the United Kingdom, in which case the law and courts of that location will apply.

If you are resident in the Republic of Ireland, this guarantee will be governed by Irish law and the Irish courts will have jurisdiction.

This guarantee is provided by Beko plc. Beko House, 1 Greenhill Crescent, Watford, Hertfordshire. WD18 8QU.

Beko plc is registered in England and Wales with company registration number 02415578.

BEKO UK AND IRELAND BUILT-IN APPLIANCES GUARANTEE TERMS AND CONDITIONS

If you have purchased a built-in or integrated appliance, and registered it within 90 days of purchase by completing the online registration form, then the standard 12 month guarantee will be extended to 24 months, under the same terms and conditions as detailed in our Standard Guarantee Terms and Conditions.

BEKO UK AND IRELAND PROSMART INVERTER MOTOR GUARANTEE TERMS AND CONDITIONS

This 10 year guarantee relates to Beko products that feature the ProSmart Inverter Motor.

The ProSmart Motor guarantee terms and conditions are in addition to our Standard guarantee terms and conditions detailed in the previous section.

In order to activate the 10 year guarantee you MUST register the appliance within 90 days of the original purchase date. You can register by first visiting Beko.co.uk/register and by following the online instructions.

Beko Free standing appliances come with a 12 month parts and labour guarantee as standard,

Beko Built-in appliances come with a 12 month parts and labour guarantee as standard. This is extended to 24 months, free of charge, upon registration of the appliance. When you register your appliance for additional guarantee, you will automatically activate the ProSmart Motor 10 year guarantee. You do not need to register twice. (beko.co.uk/guarantee-terms).

To make a claim against your Beko ProSmart Inverter Motor Guarantee (the "Guarantee"), all customer and product details must be registered with Beko plc using the procedure outlined below.

1. This extra 9 years (for free standing appliances) or 8 years (for built-in or integrated appliances) guarantee is only effective after the expiration of the standard manufacturer's guarantee.

2. It is only valid for the ProSmart Inverter motors of selected washing machines, washer-dryers, tumble dryers and dishwashers. It does not cover any labour charge or any other components of the product. In addition, it is only valid for one replacement of the ProSmart motor during the extra 9-year (for free standing appliances) or 8 year (for built-in appliances) guarantee period.

3. To activate your guarantee, you MUST register your appliance within 90 days of the original purchase date, by visiting beko.co.uk/register.

4. Customers will receive a unique reference code as proof of guarantee validation by email or post, which must be quoted at the time of a claim being made.

5. Any repair/replacement of the ProSmart Inverter motor must only be carried out by an authorised Beko Service Agent (the "Service Agent").

6. Labour for the repair/replacement of the ProSmart Inverter motor is not included in this guarantee and is chargeable directly by the Service Agent.

7. Any additional components fitted to the product at any time will not be covered by this guarantee and will be chargeable directly by the Service Agent.

8. The guarantee is not transferable and cannot be exchanged for cash.

9. There are no alternative or additional offers to this Guarantee.

10. The guarantee is exclusive of the manufacturer's standard guarantee

11. The Terms and Conditions shown above are in addition to the standard terms and conditions of your product guarantee. Please read and refer to such Terms and Conditions when making any claim.

12. We may use the information you provide for marketing purposes and to analyse your purchasing preferences. We may keep your information for a reasonable period for these purposes in accordance with the applicable Data Protection Laws and General Data Protection Regulations (GDPR). You can opt into this service during the registration process. Further details are available at http://www.beko.co.uk/cookie-and-privacy.

13. These Terms and Conditions are governed by the laws of England and Wales; manufacturer: Beko plc, Beko House, 1 Greenhill Crescent, Watford WD18 8QU. Company Registration Number: 02415578.

HOW TO OBTAIN SERVICE FOR YOUR APPLIANCE

Please keep your purchase receipt or other proof of purchase details in a safe place; you will need to have this documentation available should the product require attention under guarantee.

Please take a few moments to complete the details below, as you will need this information when you call us, or to use our online services. When you call us you may be required to input your serial number into your telephone keypad. For help please visit beko.co.uk/support/model-finder

- The product model number is printed on the Operating Instruction Booklet / User guide
- The product model and serial number is printed on the Rating Label affixed to the appliance.
- The Retailer (Purchased from) and Date of purchase will be printed on your purchase receipt or other proof of purchase paperwork

Recording of these details alone will not count as proof of purchase. A valid proof of purchase is required for requesting service under guarantee.

Model number	Serial number	Purchased from	Date of purchase

For service under guarantee or for product advice please call our Contact centre

Before requesting service please check the troubleshooting guide in the Operating Instructions booklet, as a charge may be levied where no fault is found, and even though your product may still be under guarantee.

After arranging service the area around the product must be easily accessible to the Engineer, without the need for cabinets or furniture to be removed or moved.

It is your responsibility to ensure our Engineers have a clean and safe environment to carry out any repairs.

Please have your Model number and Serial number available when you call us, as you may be required to input your serial number into your telephone keypad during your call.

UK Mainland & Northern Ireland:

0333 207 9710

Landline or mobile calls to 0333 numbers cost no more than calls to geographic numbers 01 or 02, and are charged at the basic rate. Calls from landlines and mobiles are included in free call packages but please check with your telephone service provider for exact call charges.

Republic of Ireland:

01 862 3411

Service once the manufacturers guarantee has expired

If you have purchased an extended guarantee please refer to the instructions contained within the extended guarantee agreement document, otherwise please call us using the appropriate number above, where service can be obtained at a charge.

Should you experience any difficulty in obtaining service please call us on **0333 207 9710** or **01 862 3411**

Contact us though our website

Send us a secure message through our online contact us form. Please visit our website, click Contact Us and choose a product support topic from the list of options. Complete the required details and click send message.

Product registrations

For UK registrations please visit beko.co.uk/register and for the Republic of Ireland visit beko.ie/register.