BOSCH

Register your new device on MyBosch now and get free benefits: **bosch-home.com/welcome**

MyBosch

Fridge-freezer

KIV85..

[en] User manual

Table of contents

Safety 4
General information 4
Intended use 4
Restriction on user group 5
Safe transport 5
Safe installation 5
Safe use 6
Damaged appliance 9

Preventing material damage 10

Environmental protection and saving energy 10
Disposing of packaging 10
Saving energy 10

Installation and connection 11
Scope of delivery 11
Installing and connecting the appliance 11
Criteria for the installation location 12
Preparing the appliance for the first time 12
Connecting the appliance to the electricity supply 12

Familiarising yourself with your appliance 14
Appliance 14
Controls 15

Features 15
Shelf 16
Variable shelf 16
Extendable shelf 16
Fruit and vegetable container 16
Butter and cheese compartment ... 16
Door racks 16
Accessories 16

Basic operation 17
Switching on the appliance 17
Operating tips 17
Switching off the appliance 17
Setting the temperature 17

Additional functions 18
Super function 18

Refrigerator compartment 18
Tips for storing food in the refrigerator compartment 18
Chill zones in the refrigerator compartment 18
"OK" sticker 19

Freezer compartment 19
Freezing capacity 19
Fully utilising the freezer compartment volume 19
Tips for buying frozen food 19
Tips for storing food in the freezer compartment 20
Tips for freezing fresh food 20
Shelf life of frozen food at −18 °C 21
Freezer calendar 21
Defrosting methods for frozen food 21

Defrosting 21
Defrosting in the refrigerator compartment 21
Defrosting in the freezer compartment 22

Cleaning and servicing 22
Preparing the appliance for cleaning 22
Cleaning the appliance 22
Cleaning the condensation channel and drainage hole 23
Removing the fittings 23

Troubleshooting 25
Malfunctions 25
Temperature problem 25

Noise 26
Odours..... 26
Conducting an appliance self-test..... 27

Storage and disposal..... 27
Switching off the appliance 27
Disposing of old appliance 27

Customer Service..... 27
Product number (E-Nr.) and production number (FD)..... 28

Technical data 28

Safety

Please read the safety information to ensure that you use the appliance safely.
This appliance complies with the relevant safety regulations for electrical appliances and is fitted with noise suppression.

General information

You can find general information about this instruction manual here.

- Read this instruction manual carefully. Only this will ensure you use the appliance safely and efficiently.
- This manual is intended for the user of the appliance.
- Follow the safety instructions and warnings.
- Keep the instruction manual and the product information safe for future reference or for the next owner.
- Check the appliance after unpacking it. Do not connect the appliance if it has been damaged in transit.

Intended use

Read the information on intended use to ensure that you use the appliance correctly and safely.
This appliance is only intended to be fully fitted in a kitchen. Observe the special installation instructions.
Only use this appliance:

- As specified in this instruction manual.
- For chilling and freezing food and making ice.
- In private households and in enclosed spaces in a domestic environment.
- Up to an altitude of max. 2000 m above sea level.

Restriction on user group

Avoid risks to children and vulnerable persons.
This appliance may be used by children aged 8 or over and by people who have reduced physical, sensory or mental abilities or inadequate experience and/or knowledge, provided that they are supervised or have been instructed on how to use the appliance safely and have understood the resulting dangers.
Children must not play with the appliance.
Cleaning and user maintenance must not be performed by children unless they are being supervised.
Keep children under the age of 8 years away from the appliance and power cable.
Children above the age of three years old and younger than eight years old may load and unload the the fridge-freezer.

Safe transport

Follow these safety instructions when transporting the appliance.

⚠ **WARNING – Risk of injury!**
The high weight of the appliance may result in injury when lifted.
- ▶ Do not lift the appliance on your own.

Safe installation

Follow these safety instructions when installing the appliance.

⚠ **WARNING – Risk of electric shock!**
Improper installation is dangerous.
- ▶ Connect and operate the appliance only in accordance with the specifications on the rating plate.
- ▶ Connect the appliance to a power supply with alternating current only via a properly installed socket with earthing.
- ▶ The protective conductor system of the domestic electrical installation must be properly installed.
- ▶ Never equip the appliance with an external switching device, e.g. a timer or remote control.

- ▶ When the appliance is installed, the mains plug of the power cord must be freely accessible. If free access is not possible, an all-pole isolating switch must be installed in the permanent electrical installation according to the installation regulations.
- ▶ When installing the appliance, check that the power cable is not trapped or damaged.

⚠ **WARNING – Risk of fire!**

- It is dangerous to use an extended power cord and non-approved adapters.
  - ▶ Do not use extension cables or multiple socket strips.
  - ▶ If the power cord is too short, contact Customer Service.
  - ▶ Only use adapters approved by the manufacturer.
-
  Portable multiple socket strips or portable power supply units may overheat and cause a fire.
  - ▶ Do not position portable multiple socket strips or portable power supply units behind the appliance.

Safe use

Follow these safety instructions when using the appliance.

⚠ **WARNING – Risk of electric shock!**

- If the insulation of the power cord is damaged, this is dangerous.
  - ▶ Never let the power cord come into contact with hot appliance parts or heat sources.
  - ▶ Never let the power cord come into contact with sharp points or edges.
  - ▶ Never kink, crush or modify the power cord.
- An ingress of moisture can cause an electric shock.
  - ▶ Only use the appliance in enclosed spaces.
  - ▶ Never expose the appliance to intense heat or humidity.
  - ▶ Do not use steam- or high-pressure cleaners to clean the appliance.

⚠ WARNING – Risk of suffocation!

- Children may put packaging material over their heads or wrap themselves up in it and suffocate.
  - ▶ Keep packaging material away from children.
  - ▶ Do not let children play with packaging material.
- Children may breathe in or swallow small parts, causing them to suffocate.
  - ▶ Keep small parts away from children.
  - ▶ Do not let children play with small parts.

⚠ WARNING – Risk of explosion!

- Electrical devices within the appliance may explode (e.g. heaters or electric ice makers).
  - ▶ Do not operate electrical devices within the appliance.
- Mechanical devices or other devices may damage the refrigeration circuit; flammable refrigerant may escape and explode.
  - ▶ To accelerate the defrosting process, do not use any other mechanical devices or devices other than those recommended by the manufacturer.
- Products which contain flammable propellants and explosive substances may explode, e.g. spray cans.
  - ▶ Do not store products which contain flammable propellants (e.g. spray cans) or explosive substances in the appliance.

⚠ WARNING – Risk of fire!

The vapours from flammable liquids may catch fire (explosion).

- ▶ Store high-percentage alcohol tightly closed and standing up.

⚠ WARNING – Risk of injury!

- Containers that contain carbonated drinks may burst.
  - ▶ Do not store containers that contain carbonated drinks in the freezer compartment.

- Injury to the eyes caused by escaping flammable refrigerant and hazardous gases.
  - ▶ Do not damage the pipes of the refrigerant circuit or the insulation.
- The appliance may tip.
  - ▶ Do not stand or support yourself on the base, runners or doors.

⚠ **WARNING – Risk of burns!**
Individual parts of the appliance become hot during operation.
- ▶ Never touch these hot parts.
- ▶ Keep children at a safe distance.

⚠ **WARNING – Risk of cold burns!**
Contact with frozen food and cold surfaces may cause burns by refrigeration.
- ▶ Never put frozen food straight from the freezer compartment into your mouth.
- ▶ Avoid prolonged contact of skin with frozen food, ice and the tubes in the freezer compartment.

⚠ **CAUTION – Risk of harm to health!**
To prevent food from being contaminated, you must observe the following instructions.
- ▶ If the door is open for an extended period of time, this may lead to a considerable temperature increase in the compartments of the appliance.
- ▶ Regularly clean the surfaces that may come into contact with food and accessible drain systems.
- ▶ Store raw meat and fish in suitable containers in the refrigerator so that they do not touch or drip on other food.
- ▶ If the fridge/freezer is empty for an extended period of time, switch off the appliance, defrost it, clean it and leave the door open to prevent the formation of mould.

Damaged appliance

Follow the safety instructions if your appliance is damaged.

⚠ **WARNING – Risk of electric shock!**

- If the appliance or the power cord is damaged, this is dangerous.
  - ▶ Never operate a damaged appliance.
  - ▶ Never operate an appliance with a cracked or fractured surface.
  - ▶ Call Customer Service. → *Page 27*
  - ▶ Repairs to the appliance should only be carried out by trained specialist staff.
- Improper repairs are dangerous.
  - ▶ Repairs to the appliance should only be carried out by trained specialist staff.
  - ▶ Only use genuine spare parts when repairing the appliance.

⚠ **WARNING – Risk of fire!**

If the tubes are damaged, flammable refrigerant and harmful gases may escape and ignite.

- ▶ Keep naked flames and ignition sources away from the appliance.
- ▶ Ventilate the room.
- ▶ Switch off the appliance. → *Page 17*
- ▶ Unplug the appliance from the mains or switch off the circuit breaker in the fuse box.
- ▶ Call after-sales service. → *Page 27*

Preventing material damage

Follow these instructions to prevent material damage to your appliance, accessories or other objects in your kitchen.

ATTENTION!

- Contamination with oil or fat may cause plastic parts and door seals to become porous.
  - ▸ Keep plastic parts and door seals free of oil and grease.
- Using the base, runners or appliance doors as a seat surface or climbing surface may damage the appliance.
  - ▸ Do not stand or support yourself on the base, runners or doors.

Environmental protection and saving energy

Help protect the environment by using your appliance in a way that conserves resources and by disposing of reusable materials properly.

Disposing of packaging

The packaging materials are environmentally compatible and can be recycled.

▸ Sort the individual components by type and dispose of them separately.

Information about current disposal methods are available from your specialist dealer or local authority.

Saving energy

If you follow these instructions, your appliance will use less power.

Selecting the installation location

Follow these instructions when installing your appliance.

- Keep the appliance out of direct sunlight.
- Install the appliance as far away as possible from heating elements, cookers and other heat sources:
  - – Maintain a 30 mm clearance to electric or gas cookers.
  - – Maintain a 30 cm clearance to oil or solid-fuel cookers.

+ The appliance needs to cool less frequently at low ambient temperatures.

- Use a niche depth of 560 mm.
- Do not cover or block ventilation openings.
- Ventilate the room daily.

+ The air on the back wall of the appliance does not warm up so intensely.
  The appliance must cool less frequently.

Saving energy during use

Follow these instructions when using your appliance.

Note: The arrangement of the fittings does not affect the energy consumption of the appliance.

- Do not cover or block ventilation openings.

+ The air on the back wall of the appliance does not warm up so intensely.

- Open the appliance door only briefly.
- Transport purchased food in a cool bag and place in the appliance quickly.
- Allow warm food and drinks to cool down before placing them in the appliance.
- Thaw frozen food in the refrigerator compartment to utilise the low temperature of the food.

+ The air in the appliance does not warm up so intensely.
  The appliance must cool less frequently.

- Always leave some space between the food and to the back panel.
- Pack the food airtight.

+ The air can circulate and the air humidity remains constant.

- Defrost the freezer compartment regularly.

+ A frost-free freezer compartment is power-saving and cools the frozen food optimally.

- Only open the freezer compartment door briefly and then carefully close it.

+ A closed freezer compartment door protects the freezer compartment against severe icing.

Installation and connection

Scope of delivery

After unpacking all parts, check for any transport damage and check the completeness of the delivery.
If you have any complaints, contact your dealer or our after-sales service → *Page 27*.

The delivery consists of the following:
- Built-in appliance
- Equipment and accessories[1]
- Installation material
- Installation instructions
- Operating instructions
- Customer service booklet
- Warranty enclosure[2]
- Energy label
- Product data sheet
- Information on the energy consumption and noises

Installing and connecting the appliance

Requirement: The scope of delivery of the appliance is checked.
→ *Page 11*

1. Observe the criteria for the appliance's installation location.
   → *Page 12*
2. Install the appliance in accordance with the enclosed installation instructions.
3. Prepare the appliance for first use.
   → *Page 12*
4. Electrically connect the appliance.
   → *Page 12*

[1] Depending on the appliance specifications

[2] Not in all countries

Criteria for the installation location

Follow these instructions when installing your appliance.

⚠ **WARNING**
Risk of explosion!
If the appliance is in a space that is too small, a leak in the refrigeration circuit may result in a flammable mixture of gas and air.

- Only install the appliance in a space with a volume of at least 1 m^3 per 8 g refrigerant. The volume of refrigerant is indicated on the rating plate. → *"Appliance", Fig.* 1/4, *Page 15*

The weight of the appliance ex works may be up to 65 kg depending on the model.
The subfloor must be of sufficient stability to bear the weight of the appliance.

Permitted room temperature

The permitted room temperature depends on the appliance's climate class.
The climate class can be found on the rating plate. → *"Appliance", Fig.* 1/4, *Page 15*

Climate class	Permitted room temperature
SN	10 °C to 32 °C
N	16 °C to 32 °C
ST	16 °C to 38 °C
T	16 °C to 43 °C

The appliance is fully functional within the permitted room temperature.
If an appliance with climate class SN is operated at colder room temperatures, the appliance will not be damaged up to a room temperature of 5 °C.

Niche dimensions

Observe the niche dimensions if you install your appliance in the furniture recess. If this is not the case, problems may occur when installing the appliance.

Niche depth

Install the appliance in the recommended niche depth of 560 mm.
If the niche depth is smaller, the energy consumption increases slightly.
The niche depth must be a minimum 550 mm.

Niche width

An inside niche width of at least 560 mm is required for the appliance.

Side-by-side installation

If you want to install two appliances side by side, you must maintain a distance of at least 150 mm between the appliances.

Preparing the appliance for the first time

1. Remove the informative material.
2. Remove the protective foil and transit bolts, e.g. remove the adhesive strips and carton.
3. Clean the appliance for the first time. → *Page 22*

Connecting the appliance to the electricity supply

1. Insert the mains plug of the appliance's power cable in a socket nearby.

   The connection data of the appliance can be found on the rating plate. → *"Appliance", Fig.* 1/4, *Page 15*

2. Check the mains plug is inserted properly.
✔ The appliance is now ready for use.

Familiarising yourself with your appliance

Familiarise yourself with the parts of your appliance.

Appliance

You can find an overview of the parts of your appliance here.

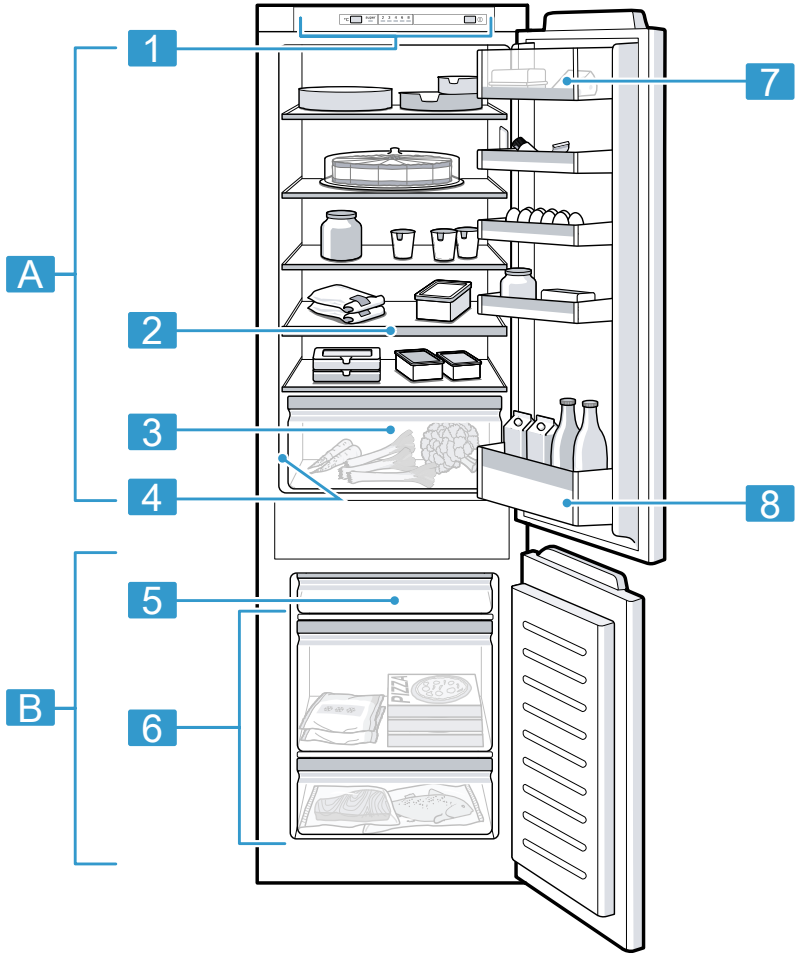

1

A	Refrigerator compartment	1	Controls
B	Freezer compartment	2	Extendable shelf → *Page 16*

3	Fruit and vegetable container → *Page 16*
4	Rating plate
5	Flat frozen food container
6	Frozen food container
7	Butter and cheese compartment → *Page 16*
8	Door storage compartment for large bottles

Note: Deviations between your appliance and the diagrams may differ with regard to their features and size.

Controls

The controls are used to configure all functions of your appliance and to obtain information about the operating status.

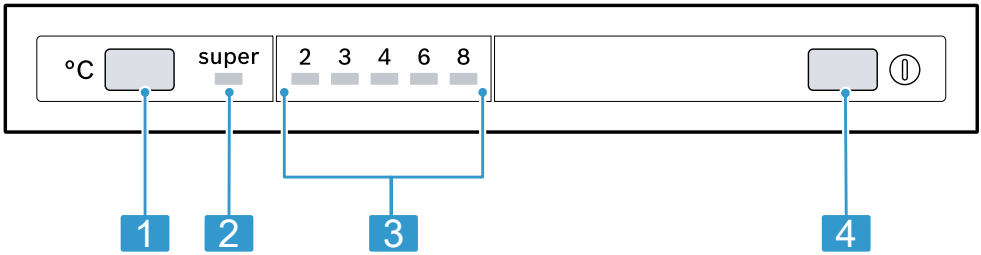

2

1	**°C** sets the temperature of the refrigerator compartment.
2	**super** lights up when the Super function is switched on.
3	Displays the set temperature for the refrigerator compartment in °C.
4	⏻ switches the appliance on or off.

Features

Here you can see an overview of the features of your appliance and their use.
The features of your appliance depend on the model.

Shelf

To vary the shelves as required, remove the shelf and re-insert it elsewhere.
→ *"Removing the shelf", Page 23*

Variable shelf

Use the variable shelf to the store tall items, e.g. cans or bottles, on the shelf below. You can remove the front section of the variable shelf and slide it below the rear part of the shelf.

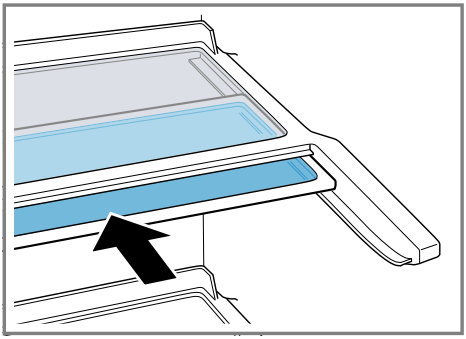

Extendable shelf

In order to achieve an improved overview and to remove food more quickly, remove the shelf.

Fruit and vegetable container

Store fresh fruit and vegetables in the fruit and vegetable container. Condensation may form in the fruit and vegetable container depending on the food and quantity stored. Remove the condensation with a dry cloth.
To ensure that the quality and aroma are retained, store fruit and vegetables that are sensitive to cold outside of the appliance at temperatures of approx. 8 °C to 12 °C.

Fruit that is sensitive to cold	■ Pineapples ■ Bananas ■ Mangoes ■ Papayas ■ Citrus fruits
Vegetables that are sensitive to cold	■ Aubergines ■ Gherkins ■ Courgettes ■ Peppers ■ Tomatoes ■ Potatoes

Butter and cheese compartment

Store butter and hard cheese in the butter and cheese compartment.

Door racks

To adjust the door racks as required, remove the door rack and re-insert elsewhere.
→ *"Removing door racks", Page 23*

Accessories

Only use original accessories. These have been made especially for your appliance. Here you can find an overview of your appliance's accessories and how to use them.
The accessories for your appliance depend on the model.

Egg tray

Store eggs safely on the egg tray.

Ice pack

Use the ice pack for temporarily keeping food cool, e.g. in a cool bag.

Tip: If a power failure or malfunction occurs, the ice pack can be used to slow down the thawing process for the stored frozen food.

Ice cube tray

Use the ice cube tray to make ice cubes.

Making ice cubes

1. Fill the ice cube tray with water up to ¾ and place in the freezer compartment.

   If the ice cube tray is stuck to the freezer compartment, loosen with a blunt implement only (e.g. spoon handle).
2. To loosen the ice cubes, twist the ice cube tray slightly or hold briefly under flowing water.

Basic operation

You can find out everything you need to know about operating your appliance here.

Switching on the appliance

1. Press ⏻.
✔ The appliance begins to cool.
2. Set the required temperature.
   → *Page 17*

Operating tips

- Once you have switched on the appliance, the set temperature is only reached after several hours. Do not put in any food in the appliance until the temperature is reached.
- The housing around the freezer compartment is temporarily heated slightly. This prevents condensation in the area of the door seal.
- When you close the door of the freezer compartment, a vacuum may be created and you may not be able to open the freezer door again immediately. Wait a moment until the vacuum is offset.

Switching off the appliance

▸ Press ⏻.
✔ The appliance stops cooling.

Setting the temperature

After you have switched on the appliance, you can set the temperature.

Setting the refrigerator compartment temperature

▸ Press °C repeatedly until the temperature display shows the required temperature.

  The recommended temperature in the refrigerator compartment is 4 °C.
  → *""OK" sticker", Page 19*

Setting the freezer compartment temperature

▸ In order to set the freezer compartment temperature, change the refrigerator compartment temperature → *Page 17*.

  The refrigerator compartment temperature influences freezer compartment temperature. Refrigerator compartment temperatures that are set to warm generate warmer freezer compartment temperatures.

Additional functions

Find out which additional functions which can be used for your appliance.

Super function

With the Super function, the refrigerator compartment and the freezer compartment cool more intensively. This refrigerates or freezes food quickly right through to the centre. Switch on the Super function 4 to 6 hours before placing food weighing 2 kg or more.
In order to utilise the freezer capacity, use the Super function.
→ *"Freezing capacity", Page 19*

Note: When the Super function is switched on, increased noise may occur.

Switching on Super function

- Press °C repeatedly until super lights up.

Note: After approx. 60 hours, the appliance switches to normal operation.

Switching off Super function

- Press °C.

Refrigerator compartment

You can keep meat, sausage, fish, dairy products, eggs, ready meals and pastries in the refrigerator compartment.
You can set the temperature in the refrigerator compartment from 2 °C to 8 °C.
The recommended temperature in the refrigerator compartment is 4 °C.
→ *""OK" sticker", Page 19*

The refrigerator compartment can also be used to store highly perishable foods in the short to medium term. The lower the selected temperature, the longer the food remains fresh.

Tips for storing food in the refrigerator compartment

Follow the tips if you store food in your refrigerator compartment.

- To ensure that the freshness and quality of the food is retained for longer, only store fresh and unspoiled food.
- In the case of ready-made products and bottled goods, do not exceed the best-before date or use-by date specified by the manufacturer.
- To retain aroma, colour and freshness or to prevent taste transfer and discolouration of the plastic parts, store food well wrapped or covered.
- Leave warm food and beverages to cool down before placing them in the refrigerator compartment.

Chill zones in the refrigerator compartment

The air circulation in the refrigerator compartment creates different chill zones.

Coldest zone

The coldest zone is between the arrow stamped on the side and the shelf underneath.

Tip: Store perishable food (e.g. fish, sausage, meat) in the coldest zone.

Warmest zone

The warmest zone is at the very top of the door.

Tip: Store food that does not spoil easily in the warmest zone, e.g. hard cheese and butter. Cheese can then continue to release its aroma and the butter will still be easy to spread.

"OK" sticker

The "OK" sticker lets you check whether the refrigerator compartment reaches the safe temperature ranges of +4 °C or colder recommended for food.
The "OK" sticker is not included with all models.
If the sticker does not indicate "OK", gradually reduce the temperature.
→ *"Setting the refrigerator compartment temperature", Page 17*
Once the appliance is switched on, it may take up to 12 hours until the set temperature is reached.

Correct setting

Freezer compartment

You can store frozen food, freeze food and make ice cubes in the freezer compartment.
The temperature in the freezer compartment depends on the temperature in the refrigerator compartment.
Long-term storage of food should be at –18 °C or lower.
The freezer compartment can be used to store perishable food long-term. The low temperatures slow down or stop the spoilage.
The time between putting fresh food in the freezer compartment and it freezing solid depends on various factors:

- Set temperature
- Food (size and type)
- Quantity and type of storage
- Quantity and type of food already stored

Freezing capacity

The maximum freezing capacity indicates the quantity of food that can be frozen right through to the centre within a specific period of time.
Information on the maximum freezing capacity can be found on the rating plate. → *"Appliance", Fig.* **1**/**4**, *Page 15*

Prerequisites for freezing capacity

1. Approx. 24 hours before placing fresh food in the appliance, switch on Super function.
   → *"Switching on Super function", Page 18*
2. Add the food in the top frozen food container first.
3. If the top frozen food container is not sufficient, place the remaining quantity in the lowest frozen food container.

Fully utilising the freezer compartment volume

Learn how to store the maximum amount of frozen food in the freezer compartment.

1. Remove all fittings. → *Page 23*
2. Store food directly on the shelves and on the floor of the freezer compartment.

Tips for buying frozen food

Follow the tips when you are buying frozen food.

- Check the packaging is not damaged.
- Check the best-before date.
- The temperature in the supermarket freezer must be –18 °C or lower.

- Do not interrupt the deep-freeze chain. If possible, transport frozen food in a cool bag and quickly place it in the freezer compartment.

Tips for storing food in the freezer compartment

Follow the tips if you are storing food in the freezer compartment.

- To quickly and gently freeze larger quantities of fresh food, place this in the lower frozen food container.
- Place the food over the whole area of the compartments or the frozen food containers.
- Do not bring food which is to be frozen into contact with frozen food.
  If necessary, redistribute frozen food in the freezer compartment.
- To ensure that the air can circulate freely in the appliance, push the frozen food containers in as far as they will go.

Tips for freezing fresh food

Follow the tips when you freeze fresh food.

- Freeze fresh and undamaged food only.
- Cooked, roasted or baked food is more suitable for consumption than food that can be eaten raw.
- In order to retain the nutritional value, flavour and colour, you should prepare certain food for freezing.
  - Vegetables: Wash, chop up, blanch.
  - Fruit: Wash, pit and perhaps peel, possibly add sugar or ascorbic acid solution.

Additional information on how to do this can be found in the relevant literature.

Food suitable for freezing

- Baked goods
- Fish and seafood
- Meat
- Poultry and game
- Vegetables, fruit and herbs
- Eggs without shells
- Dairy products, e.g. cheese, butter and quark
- Ready meals and leftovers, e.g. soups, stews, cooked meat and fish, potato dishes, bakes and desserts

Food that is unsuitable for freezing

- Types of vegetables that are usually eaten raw, e.g. lettuce or radishes
- Unpeeled or hard-boiled eggs
- Grapes
- Whole apples, pears and peaches
- Yoghurt, soured milk, sour cream, crème fraîche and mayonnaise

Packing frozen food

If you select suitable packaging material the correct type of packaging, you can determine the product quality and prevent freezer burn.

1. Place the food in the packaging.
   Suitable packaging:
   - Plastic film made of polyethylene
   - Tubular film made of polyethylene
   - Freezer bags made from polyethylene
   - Freezer containers

   Unsuitable packaging:
   - Wrapping paper
   - Greaseproof paper
   - Cellophane
   - Aluminium foil
   - Rubbish bags and used shopping bags
2. Squeeze out the air.

3. Pack food airtight to prevent it from losing flavour and drying out.

   Suitable seals:
   - Rubber bands
   - Plastic clips
   - Cold-resistant adhesive tape
4. Label the packaging with the contents and the date of freezing.

Shelf life of frozen food at –18 °C

Observe the storage times when you freeze food.

Food	Storage time
Fish, sausages, ready meals and baked goods	Up to 6 months
Poultry, meat	Up to 8 months
Vegetables, fruit	Up to 12 months

Freezer calendar

The imprinted freezer calendar indicates the maximum storage duration in months at a constant temperature of –18 °C.

Defrosting methods for frozen food

To retain the best-possible product quality, the defrosting method must be adjusted to the food and application.

⚠ **CAUTION**
Risk of harm to health!
During the thawing process, bacteria may develop and spoil the frozen food.
- Do not refreeze food after it has been defrosted or started to defrost.
- Refreeze food only after cooking.
- The frozen items should no longer be stored for the maximum storage period.

Defrosting method	Food
Refrigerator compartment	Animal-based food such as fish, meat, cheese, quark
Room temperature	Bread
Microwave	Food for immediate consumption or immediate preparation
Oven or cooker	Food for immediate consumption or immediate preparation

Defrosting

Observe the information when you want to defrost your appliance.

Defrosting in the refrigerator compartment

When the appliance is operating, condensation droplets or frost form on the rear panel of the refrigerator compartment due to functional reasons. The back panel in the refrigerator compartment defrosts automatically.
Condensation or frost run through the condensation channel into the drainage hole to the evaporation pan and do not have to be wiped away.
To ensure that the condensation can drain and odours do not form, observe the following information:
→ *"Cleaning the condensation channel and drainage hole", Page 23*.

Defrosting in the freezer compartment

As the frozen food must not start thawing, the freezer compartment does not defrost automatically. A layer of hoarfrost in the freezer compartment impairs refrigeration of the frozen food and increases power consumption.

Defrosting the freezer compartment

Regularly defrost the freezer compartment.

1. Switch on the Super function approx. four hours before defrosting. → *"Switching on Super function", Page 18*

   This means that the food reaches very low temperatures and it can be stored for longer at room temperature.
2. Remove the frozen food container with the frozen food and temporarily place it in a cool location. Place ice packs (if available) on the frozen food.
3. Switch off the appliance. → *Page 17*
4. Disconnect the appliance from the power supply.

   Unplug the appliance from the mains or switch off the circuit breaker in the fuse box.
5. To accelerate the defrosting process, place a pan of hot water on a trivet in the freezer compartment.
6. Wipe up the condensation water with a soft cloth or sponge.
7. Rub the freezer compartment dry with a soft, dry cloth.
8. Electrically connect the appliance. → *Page 12*
9. Switch on the appliance. → *Page 17*
10. Reinsert the frozen food containers with the frozen food.

Cleaning and servicing

To keep your appliance working efficiently for a long time, it is important to clean and maintain it carefully.

Preparing the appliance for cleaning

Find out how to prepare your appliance for cleaning.

1. Switch off the appliance. → *Page 17*
2. Disconnect the appliance from the power supply.

   Unplug the appliance from the mains or switch off the circuit breaker in the fuse box.
3. Take out all of the food and store it in a cool location.

   Place ice packs (if available) onto the food.
4. If there is a layer of hoarfrost, allow this to defrost.
5. Remove all fittings from the appliance. → *Page 23*

Cleaning the appliance

Clean the appliance as specified to ensure that it is not damaged by incorrect cleaning or unsuitable cleaning products.

⚠ **WARNING**
Risk of electric shock!

- An ingress of moisture can cause an electric shock.
  - ▸ Do not use steam- or high-pressure cleaners to clean the appliance.

- Liquid in the lighting can be dangerous.
  - ▸ The rinsing water must not run into the light.

ATTENTION!

- Unsuitable cleaning products may damage the surfaces of the appliance.
  - ▸ Do not use hard scouring pads or cleaning sponges.
  - ▸ Do not use harsh or abrasive detergents.
  - ▸ Do not use cleaning products with a high alcohol content.
- If you clean fittings and accessories in the dishwasher, this may cause them to become deformed or discolour.
  - ▸ Never clean shelves or containers in the dishwasher.

1. Prepare the appliance for cleaning. → *Page 22*
2. Clean the appliance, the fittings and the door seals clean with a dish cloth, lukewarm water and a little pH-neutral washing-up liquid.
3. Dry thoroughly with a soft, dry cloth.
4. Insert the fittings.
5. Electrically connect the appliance. → *Page 12*
6. Switch on the appliance. → *Page 17*
7. Putting the food into the appliance.

Cleaning the condensation channel and drainage hole

Regularly clean the condensation channel and drainage hole to ensure that the condensation can drain.

- ▸ Carefully clean the condensation channel and the drainage hole, e.g. using a moistened cotton bud.

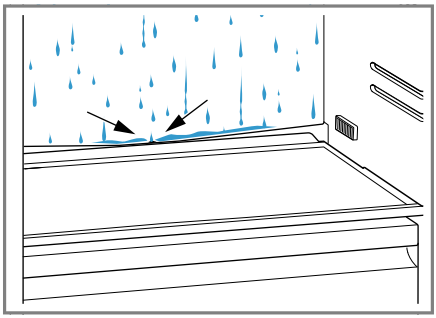

Removing the fittings

If you want to clean the fittings thoroughly, remove these from your appliance.

Removing the shelf

- ▸ Pull out and remove the shelf.

Removing the extendable shelf

1. Pull out the extendable shelf until the locking catch is released.

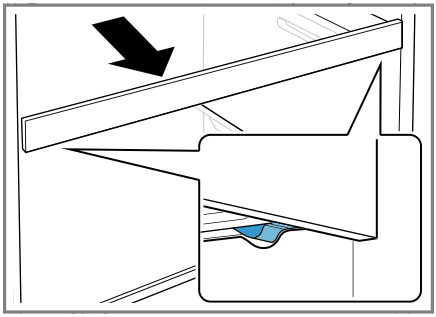

2. Lower the shelf and swing it out to the side.

Removing door racks

- ▸ Lift the door rack upwards and remove it.

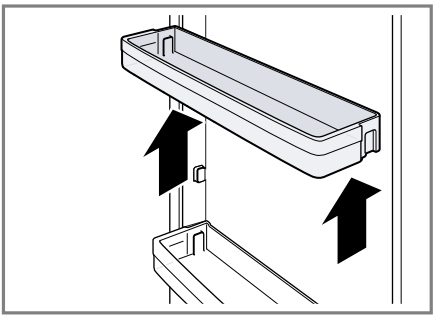

Removing the fruit and vegetable container

1. Pull the container out all the way.
2. Lift the container at the front ① and remove it ②.

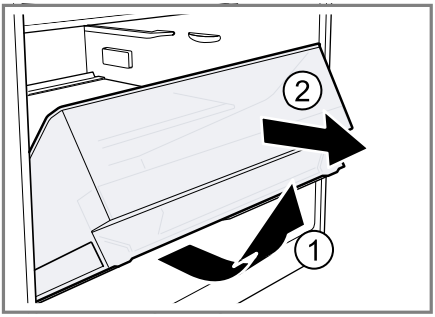

Removing the frozen food container

1. Take out the frozen food container as far as it will go.
2. Lift the frozen food container at the front ① and remove it ②.

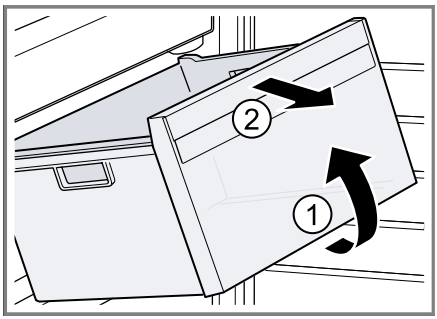

Troubleshooting

You can rectify minor faults on your appliance yourself. Read the troubleshooting information before contacting after-sales service. This will avoid unnecessary costs.

⚠ **WARNING**
Risk of electric shock!
Improper repairs are dangerous.
- Repairs to the appliance should only be carried out by trained specialist staff.
- Only use genuine spare parts when repairing the appliance.

Malfunctions

Errors	Cause	Troubleshooting
The appliance is not working.	The mains plug has not been inserted properly.	▸ Connect the mains plug.
No displays light up.	Fuse has been tripped.	▸ Check the fuses.
	The power has failed.	1. Check whether the power is on. 2. Place ice packs (if available) on the frozen food.
The refrigeration unit is switching on more frequently and for longer.	The appliance door was opened frequently.	▸ Do not open appliance door unnecessarily.
	The ventilation openings are covered up.	▸ Remove any obstructions from in front of the ventilation openings.
The base of the refrigerator compartment is wet.	The condensation channel or drainage hole are blocked.	▸ Clean the condensation channel and the drainage hole. → *Page 23*

Temperature problem

Errors	Cause	Troubleshooting
The temperature differs greatly from the setting.	Different causes are possible.	1. Switch off the appliance. → *Page 17* 2. Switch the appliance back on after five minutes. → *Page 17* – If the temperature is too warm, check the temperature again after a couple of hours. – If the temperature is too cold, check the temperature again on the following day.

Noise

Errors	Cause	Troubleshooting
Appliance has a humming sound.	Not a fault. A motor is running, e.g. refrigerating unit, fan.	No action required.
The appliance bubbles, buzzes or gargles.	Not a fault. Refrigerant flows through the pipes.	No action required.
The appliance clicks.	Not a fault. Motor, switches or solenoid valves are switching on or off.	No action required.
The appliance makes noises.	The appliance is not level.	▶ Align the appliance using a spirit level. If required, place something underneath it.
	Fittings wobble or stick.	▶ Check the removable fittings and, if required, replace these.
	Bottles or containers are touching.	▶ Move the bottles or containers away from each other.
	Super function is switched on.	No action required.

Odours

Errors	Cause	Troubleshooting
The appliance has an unpleasant smell.	Different causes are possible.	1. Prepare the appliance for cleaning. → *Page 22* 2. Clean the appliance. → *Page 22* 3. Clean all food packaging. 4. To prevent odours from forming, store strong smelling food in airtight containers. 5. After 24 hours, check whether odours are still forming.

Conducting an appliance self-test

1. Switch off the appliance. → *Page 17*
2. Switch the appliance back on after approx. five minutes. → *Page 17*
3. Within 10 seconds of switching on, press and hold °C for three to five seconds until 2 °C lights up in the temperature display and an audible signal sounds.

✔ The appliance self-test starts when the temperature displays light up in succession.
✔ While the appliance self-test is running, a long audible signal sounds.
✔ If, at the end of the appliance self-test, the temperature display shows the set temperature, your appliance is OK. The appliance then switches to normal operation.
✔ If, at the end of the appliance self-test, super flashes for 10 seconds, inform the after-sales service.

Storage and disposal

You can find out here how to prepare your appliance for storage. You will also find out how to dispose of old appliances.

Switching off the appliance

1. Switch off the appliance. → *Page 17*
2. Disconnect the appliance from the power supply.

   Unplug the appliance from the mains or switch off the circuit breaker in the fuse box.
3. Defrost the appliance. → *Page 21*
4. Clean the appliance. → *Page 22*
5. Leave the appliance door open.

Disposing of old appliance

Valuable raw materials can be reclaimed by recycling.

⚠ **WARNING**
Risk of harm to health!
Children can lock themselves in the appliance, thereby putting their lives at risk.

- Leave shelves and containers inside the appliance to prevent children from climbing in.
- Keep children away from the redundant appliance.

- Dispose of the appliance in an environmentally friendly manner.

This appliance is labelled in accordance with European Directive 2012/19/EU concerning used electrical and electronic appliances (waste electrical and electronic equipment - WEEE). The guideline determines the framework for the return and recycling of used appliances as applicable throughout the EU.

Customer Service

If you have any queries, are unable to rectify faults on the appliance yourself or if your appliance needs to be repaired, contact Customer Service. You can solve many problems yourself by consulting the information on troubleshooting in these instructions or on our website. If this is not the case, contact our Customer Service. We will always find an appropriate solution and try to avoid unnecessary visits being made by a Customer Service technician.
With any warranty claims we will make sure that your appliance is repaired by trained Customer Service

technicians using genuine spare parts, including after the manufacturer's warranty has expired.
For safety reasons repairs to the appliance should only be carried out by trained specialist staff. The warranty claim becomes void if repairs or interventions have been carried out by persons not authorised by us for that purpose or if our appliances have been fitted with spare, supplementary or accessory parts that were not genuine parts and then resulted in a defect.
Function-relevant genuine spare parts according to the corresponding Ecodesign Order can be obtained from Customer Service for a period of at least 10 years from the date on which your appliance was placed on the market within the European Economic Area.

Note: Under the terms of the manufacturer's warranty applicable to the location the use of Customer Service is free of charge. The minimum duration of the warranty (manufacturer's warranty for private consumers) in the European Economic Area is 2 years (except for Denmark and Sweden, where it is 1 year) according to the terms of warranty applicable to the location. The terms of warranty do not affect other rights or claims held by yourself under local legislation.

Detailed information about the warranty period and terms of warranty in your country are available from Customer Service, your dealer or our website.
When contacting Customer Service, you will need the product number (E-Nr.) and the production number (FD) of your appliance.

The contact details for Customer Service can be found in the enclosed Customer Service directory or on our website.

Product number (E-Nr.) and production number (FD)

The product number (E-Nr.) and the production number (FD) can be found on the rating plate of the appliance.
→ *"Appliance", Fig.* 1/4, *Page 15*
Make a note of your appliance's details and the Customer Service telephone number to find them again quickly.

Technical data

Refrigerant, cubic capacity and further technical specifications can be found on the rating plate.
→ *"Appliance", Fig.* 1/4, *Page 15*
More information about your model can be found online at https://www.bsh-group.com/energylabel[1].
This web address is linked to the official EU EPREL product database. At the time of printing its web address had not yet been published. Please then follow the instructions on searching for models. The model identifier is made up of the characters before the slash in the product number (E-Nr.) on the rating plate. Alternatively you can also find the model identifier in the first line of the EU energy label.

[1] Only applies to countries in the European Economic Area

Thank you for buying a Bosch Home Appliance!

Register your new device on MyBosch now and profit directly from:

- **Expert tips & tricks for your appliance**
- **Warranty extension options**
- **Discounts for accessories & spare-parts**
- **Digital manual and all appliance data at hand**
- **Easy access to Bosch Home Appliances Service**

Free and easy registration – also on mobile phones:
www.bosch-home.com/welcome

Looking for help? You'll find it here.

Expert advice for your Bosch home appliances, help with problems or a repair from Bosch experts.
Find out everything about the many ways Bosch can support you:
www.bosch-home.com/service
Contact data of all countries are listed in the attached service directory.

Robert Bosch Hausgeräte GmbH
Carl-Wery-Straße 34
81739 München
GERMANY
www.bosch-home.com

9001483704 (990930)
en