PHC6.7FLBIX

12NC: F094981

GTIN (EAN) code: 5016108949818

Hotpoint

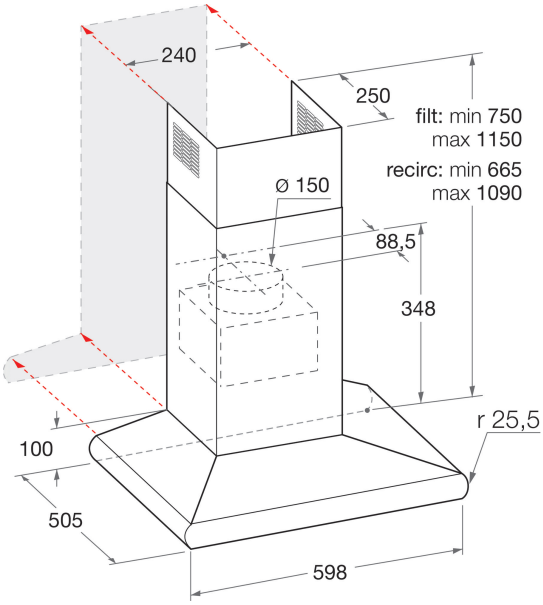

MAIN FEATURES

Product group	Hood
Colour body	Inox
Material body	Stainless steel
Colour chimney	-
Material chimney	-
Typology	Wall-mounted
Installation type	Wall-mounted
Type of control	Electronic
Type of control settings	-
Decor panel options	-
Motor location	Integrated motor in hood body
Operating Mode	Convertible
Electrical connection rating (W)	255
Current (A)	1,1
Voltage (V)	220-240
Frequency (Hz)	50
Length of Electrical Supply Cord (cm)	150
Plug type	No
Chimney height (mm)	-
Height of product, without chimney (mm)	0
Height of the product	1150
Width of the product	600
Depth of the product	500
Minimum niche height	0
Minimum niche width	0
Niche depth	0
Net weight (kg)	13.20

TECHNICAL FEATURES

Type of manual control devices	Soft buttons
Type of automatic control devices	-
Number of motors	1
Total power of the motors (W)	0
Number of speed settings: boost option availability	4
Boost presence	Yes
Maximum output air extraction (m^3/h)	713
Boost position air extraction (m^3/h)	0
Maximum output recirculating air (m^3/h)	0
Boost position output recirculating (m^3/h)	0
Light Control Type	On/Off
Number of lights	2
Type of lamps used	LED
Total power of the lamps (W)	5
Diameter of air outlet (mm)	150
No-return airflow flap	Yes
Grease filter material	Washable stainless steel
Odour filter	Yes

PERFORMANCES

Sound power at min. speed (2010/30/EU)	35
Sound power at max. speed (2010/30/EU)	60
Noise level with boost position (dB(A) re 1 pW)	72