Washing Machine

User manual

WD90J7*****

SSEC SEC

SAMSUNG

Contents

Safety information 3

What you need to know about the safety instructions 3
Important safety symbols 3
Important safety precautions 4
Instructions about the WEEE 14

Installation 15

What's included 15
Installation requirements 17
Step-by-step installation 19

Before you start 25

Initial settings 25
Laundry guidelines 26
Detergent drawer guidelines 28

Operations 31

Control panel 31
Simple steps to start 33
Dry clothes Only 34
Course overview 35
Settings 39

Maintenance 40

Eco Drum Clean 40
Smart check 41
USING DRY COURSE 42
AIR WASH 43
Emergency drain 44
Cleaning 45
Recovery from freezing 48
Care against an extended time of disuse 48

Troubleshooting 49

Checkpoints 49
Information codes 54

Specifications 57

Fabric care chart 57
Protecting the environment 58
Specification sheet 59

WD90J7400GW_03478B-02_EN(EU).indd 2 2015/12/15 14:03:45

Safety information

Congratulations on your new Samsung washing machine. This manual contains important information on the installation, use and care of your appliance. Please take some time to read this manual to take full advantage of your washing machine's many benefits and features.

What you need to know about the safety instructions

Please read this manual thoroughly to ensure that you know how to safely and efficiently operate the extensive features and functions of your new appliance. Please store the manual in a safe location close to the appliance for future reference. Use this appliance only for its intended purpose as described in this instruction manual.
Warnings and Important Safety Instructions in this manual do not cover all possible conditions and situations that may occur. It is your responsibility to use common sense, caution and care when installing, maintaining and operating your washing machine.
Because the following operating instructions cover various models, the characteristics of your washing machine may differ slightly from those described in this manual and not all warning signs may be applicable. If you have any questions or concerns, contact your nearest service centre or find help and information online at www.samsung.com.

Important safety symbols

What the icons and signs in this user manual mean:

⚠ **WARNING**

Hazards or unsafe practices that may result in **severe personal injury, death and/or property damage**.

⚠ **CAUTION**

Hazards or unsafe practices that may result in **personal injury and/or property damage**.

NOTE

Indicates that a risk of personal injury or material damage exists.

WD90J7400GW_03478B-02_EN(EU).indd 3 2015/12/15 14:03:45

Safety information

These warning signs are here to prevent injury to yourself and others.
Please follow them explicitly.
After reading this manual, store it in a safe place for future reference.

Read all instructions before using the appliance.

As with any equipment that uses electricity and moving parts, potential hazards exist. To safely operate this appliance, familiarize yourself with its operation and exercise care when using it.

Important safety precautions

⚠ WARNING

To reduce the risk of fire, electric shock, or injury to persons when using your appliance, follow basic precautions, including the following:

1. This appliance is not to be used by persons (including children) with reduced physical, sensory or mental capabilities, or lack of experience and knowledge, unless they have been given supervision or instruction concerning use of the appliance by a person responsible for their safety.
2. For use in Europe: This appliance can be used by children aged from 8 years and above and persons with reduced physical, sensory or mental capabilities or lack of experience and knowledge if they have been given supervision or instruction concerning use of the appliance in a safe way and understand the hazards involved. Children shall not play with the appliance. Cleaning and user maintenance shall not be made by children without supervision.
3. Children should be supervised to ensure that they do not play with the appliance.
4. If the supply cord is damaged, it must be replaced by the manufacturer, its service agent or similarly qualified persons in order to avoid a hazard.

WD90J7400GW_03478B-02_EN(EU).indd 4 2015/12/15 14:03:45

5. The new hose-sets supplied with the appliance are to be used and that old hose-sets should not be reused.
6. For appliances with ventilation openings in the base, that a carpet must not obstruct the openings.
7. For use in Europe: Children of less than 3 years should be kept away unless continuously supervised.

⚠ **CAUTION**

8. In order to avoid a hazard due to inadvertent resetting of the thermal cut-out, this appliance must not be supplied through an external switching device, such as a timer, or connected to a circuit that is regularly switched on and off by the utility.
9. The tumble dryer is not to be used if industrial chemicals have been used for cleaning.
10. The lint trap has to be cleaned frequently, if applicable.
11. Lint must not to be allowed to accumulate around the tumble dryer. (not applicable for appliances intended to be vented to the exterior of the building)
12. Adequate ventilation has to be provided to avoid the back flow of gases into the room from appliances burning other fuels, including open fires.
13. Do not dry unwashed items in the tumble dryer.
14. Items that have been soiled with substances such as cooking oil, acetone, alcohol, petrol, kerosene, spot removers, turpentine, waxes and wax removers should be washed in hot water with an extra amount of detergent before being dried in the tumble dryer.
15. Items such as foam rubber (latex foam), shower caps, waterproof textiles, rubber backed articles and clothes or pillows fitted with foam rubber pads should not be dried in the tumble dryer.
16. Fabric softeners, or similar products, should be used as specified by the fabric softener instructions.

WD90J7400GW_03478B-02_EN(EU).indd 5 2015/12/15 14:03:45

Safety information

17. The final part of a tumble dryer cycle occurs without heat (cool down cycle) to ensure that the items are left at a temperature that ensures that the items will not be damaged.

18. Remove all objects from pockets such as lighters and matches.

⚠ **WARNING**

19. Never stop a tumble dryer before the end of the drying cycle unless all items are quickly removed and spread out so that the heat is dissipated.

20. Exhaust air must not be discharged into a flue which is used for exhausting fumes from appliances burning gas or other fuels.

21. The appliance must not be installed behind a lockable door, a sliding door or a door with a hinge on the opposite side to that of the tumble dryer, in such a way that a full opening of the tumble dryer door is restricted.

WD90J7400GW_03478B-02_EN(EU).indd 6 2015/12/15 14:03:46

Critical installation warnings

⚠ **WARNING**

The installation of this appliance must be performed by a qualified technician or service company.

- Failure to do so may result in electric shock, fire, an explosion, problems with the product, or injury.

The appliance is heavy, therefore take care when lifting it.

Plug the power cord into an AC 220 - 240 V / 50 Hz wall socket or higher and use the socket for this appliance only. Never use an extension cord.

- Sharing a wall socket with other appliances using a power strip or extending the power cord may result in electric shock or fire.
- Ensure that the power voltage, frequency, and current are the same as those of the product specifications. Failure to do so may result in electric shock or fire. Plug the power plug into the wall socket firmly.

Remove all foreign substances such as dust or water from the power plug terminals and contact points using a dry cloth on a regular basis.

- Unplug the power plug and clean it with a dry cloth.
- Failure to do so may result in electric shock or fire.
- Plug the power plug into the wall socket so that the cord is running towards the floor.
  If you plug the power plug into the socket in the opposite direction, the electric wires within the cable may be damaged and this may result in electric shock or fire.

Keep all packaging materials out of the reach of children as these may be dangerous.

- If a child places a bag over its head, it may suffocate.
  When the appliance, power plug or power cord is damaged, contact your nearest service centre.

This appliance must be properly grounded.

Do not ground the appliance to a gas pipe, plastic water pipe, or telephone line.

- This may result in electric shock, fire, an explosion, or problems with the product.
- Never plug the power cord into a socket that is not grounded correctly and make sure that it is in accordance with local and national regulations.

Do not install this appliance near a heater or any inflammable material.

Do not install this appliance in a humid, oily or dusty location, or in a location exposed to direct sunlight or water (rain drops).

Do not install this appliance in a location exposed to low temperatures.

- Frost may cause the tubes to burst.

WD90J7400GW_03478B-02_EN(EU).indd 7 2015/12/15 14:03:46

Safety information

Do not install this appliance in a location where gas may leak.
- This may result in electric shock or fire.

Do not use an electric transformer.
- This may result in electric shock or fire.

Do not use a damaged power plug, damaged power cord, or loose wall socket.
- This may result in electric shock or fire.

Do not pull or excessively bend the power cord.

Do not twist or tie the power cord.

Do not hook the power cord over a metal object, place a heavy object on the power cord, insert the power cord between objects, or push the power cord into the space behind the appliance.
- This may result in electric shock or fire.

Do not pull the power cord when unplugging the power plug.
- Unplug the power plug by holding the plug.
- Failure to do so may result in electric shock or fire.

This appliance should be positioned so that the power plug, the water supply taps, and the drain pipes are accessible.

WD90J7400GW_03478B-02_EN(EU).indd 8 2015/12/15 14:03:46

Installation cautions

⚠ **CAUTION**

This appliance should be positioned in such a way that the power plug is easily accessible.
- Failure to do so may result in electric shock or fire due to electric leakage.

Install your appliance on a solid, level floor that can support its weight.
- Failure to do so may result in abnormal vibrations, movement, noise, or problems with the product.

Critical usage warnings

⚠ **WARNING**

If the appliance is flooded, turn off the water & power supplies immediately and contact your nearest service centre.
- Do not touch the power plug with wet hands.
- Failure to do so may result in electric shock.

If the appliance generates a strange noise, a burning smell, or smoke, unplug the power plug immediately and contact your nearest service centre.
- Failure to do so may result in electric shock or fire.

In the event of a gas leak (such as propane gas, LP gas, etc.), ventilate immediately without touching the power plug. Do not touch the appliance or power cord.
- Do not use a ventilating fan.
- A spark may result in an explosion or fire.

Do not let children play in or on the washing machine. In addition, when disposing of the appliance, remove the washing machine door lever.
- If trapped inside the product, children may suffocate to death.

Make sure to remove the packaging (sponge, styrofoam) attached to the bottom of the washing machine before using it.

Do not wash items contaminated with gasoline, kerosene, benzene, paint thinner, alcohol or other inflammable or explosive substances.
- This may result in electric shock, fire, or an explosion.

WD90J7400GW_03478B-02_EN(EU).indd 9 2015/12/15 14:03:46

Safety information

Do not open the washing machine door by force while it is operating (high-temperature washing/drying/spinning).

- Water flowing out of the washing machine may result in burns or cause the floor to be slippery. This may result in injury.
- Opening the door by force may result in damage to the product or injury.

Do not insert your hand under the washing machine while an operation is in progress.

- This may result in injury.

Do not touch the power plug with wet hands.

- This may result in electric shock.

Do not turn the appliance off by unplugging the power plug while an operation is in progress.

- Plugging the power plug into the wall socket again may cause a spark and result in electric shock or fire.

Do not let children or the infirm use this washing machine without proper supervision. Do not let children climb in or onto the appliance.

- This may result in electric shock, burns or injury.

Do not insert your hand or a metal object under the washing machine while it is operating.

- This may result in injury.

Do not unplug the appliance by pulling the power cord. Always grip the plug firmly and pull it straight out of the outlet.

- Damage to the power cord may cause a short-circuit, fire and/or electric shock.

Do not attempt to repair, disassemble, or modify the appliance yourself.

- Do not use a fuse (such as copper, steel wire, etc.) other than a standard fuse.
- When the appliance needs to be repaired or reinstalled, contact your nearest service centre.
- Failure to do so may result in electric shock, fire, problems with the product, or injury.

If the water supply hose comes loose from the water tap and floods the appliance, unplug the power plug.

- Failure to do so may result in electric shock or fire.

Unplug the power plug when the appliance is not being used for long periods of time or during a thunder or lightning storm.

- Failure to do so may result in electric shock or fire.

If any foreign substance enters into the appliance, unplug the power plug and contact you nearest Samsung Customer Service.

- This may result in electric shock or fire.

Do not let children (or pets) play in or on your washing machine. The washing machine door does not open easily from the inside and children may be seriously injured if trapped inside.

WD90J7400GW_03478B-02_EN(EU).indd 10 2015/12/15 14:03:46

Usage cautions

⚠ **CAUTION**

When the washing machine is contaminated by a foreign substance such as detergent, dirt, food waste, etc., unplug the power plug and clean the washing machine using a damp, soft cloth.

- Failure to do so may result in discolouration, deformation, damage, or rust.

The front glass may be broken by a strong impact. Take care when using the washing machine.

- If the glass is broken, it may result in injury.

After a water supply failure or when reconnecting the water supply hose, open the water tap slowly.

Open the water tap slowly after a long period of non-use.

- The air pressure in the water supply hose or the water pipe may damage a product part or result in a water leak.

If a draining error occurs during an operation, check if there is a draining problem.

- If the washing machine is used when it is flooded because of a draining problem, it may result in electric shock or fire.

Insert the laundry into the washing machine completely so that the laundry does not get caught in the door.

- If laundry gets caught in the door, it may result in damage to the laundry or the washing machine, or result in a water leak.

Turn the water supply off when the washing machine is not being used.

Ensure that the screws on the water supply hose connector are properly tightened.

- Failure to do so may result in property damage or injury.

Ensure that the rubber seal and front door glass are not contaminated by a foreign substance (e.g. waste, thread, hair, etc.).

- If a foreign substance is caught in the door or the door is not completely closed, it may cause a water leak.

Open the water tap and check if the water supply hose connector is firmly tightened and that there is no water leak before using the product.

- If the screws on the water supply hose connector are loose, it may result in a water leak.

The product you have purchased is designed for domestic use only.

WD90J7400GW_03478B-02_EN(EU).indd 11 2015/12/15 14:03:46

Safety information

Using the product for business purposes qualifies as a product misuse. In this case, the product will not be covered by the standard warranty provided by Samsung and no responsibility can be attributed to Samsung for malfunctions or damages resulting from such misuse.

Do not stand on the appliance or place objects (such as laundry, lighted candles, lighted cigarettes, dishes, chemicals, metal objects, etc.) on the appliance.

- This may result in electric shock, fire, problems with the product, or injury.

Do not spray volatile material such as insecticide onto the surface of the appliance.

- As well as being harmful to humans, this may result in electric shock, fire or problems with the product.

Do not place objects that generate electromagnetic fields near the washing machine.

- This may result in injury due to a malfunction.

Water drained during a high-temperature wash or drying cycle is hot. Do not touch the water.

- This may result in burns or injury.

Do not wash, spin, or dry water-proof seats, mats, or clothing (*) unless your appliance has a special cycle for washing these items.

(*): Woollen bedding, rain covers, fishing vests, ski pants, sleeping bags, diaper covers, sweat suits, and bicycle, motor cycle and car covers, etc.

- Do not wash thick or hard mats even if the washing machine mark is on the care label. This may result in injury or damage to the washing machine, walls, floor, or clothing due to abnormal vibrations.
- Do not wash throw rugs or doormats with rubber backing. The rubber backing may come off and stick to inside the drum, and this may result in malfunction such as a drainage error.

Do not operate the washing machine when the detergent drawer is removed.

- This may result in electric shock or injury due to a water leak.

Do not touch the insides of the drum during or just after drying as it is hot.

- This may result in burns.

Do not insert your hand into the detergent drawer.

- This may result in injury as your hand may be caught by the detergent input device.
- The liquid detergent guide (applicable models only) is not used for powder detergent. Remove the guide when using powder detergent.

Do not place any objects (such as shoes, food waste, animals) other than laundry into the washing machine.

- This may result in damage to the washing machine, or injury and death in the case of pets due to the abnormal vibrations.

WD90J7400GW_03478B-02_EN(EU).indd 12 2015/12/15 14:03:46

Do not press the buttons using sharp objects such as pins, knifes, fingernails, etc.
- This may result in electric shock or injury.

Do not wash laundry contaminated by oils, creams or lotions usually found in skincare shops or massage clinics.
- This may cause the rubber seal to become deformed and result in a water leak.

Do not leave metal objects such as safety pins, hair pins or bleach in the drum for long periods of time.
- This may cause the drum to rust.
- If rust starts appearing on the surface of the drum, apply a (neutral) cleansing agent to the surface and use a sponge to clean it. Never use a metal brush.

Do not use dry cleaning detergent directly and do not wash, rinse, or spin laundry contaminated by dry cleaning detergent.
- This may result in spontaneous combustion or ignition due to the heat from the oxidation of the oil.

Do not use water from water cooling/heating devices.
- This may result in problems with the washing machine.

Do not use natural hand-washing soap for the washing machine.
- If it hardens and accumulates inside the washing machine, it may result in problems with the product, discolouration, rust, or bad odours.

Place socks and brassieres in a washing net and wash them with the other laundry.

Do not wash large laundry items such as bedding in the washing net.
- Failure to do so may result in injury due to abnormal vibrations.

Do not use hardened detergent.
- If it accumulates inside the washing machine, it may result in a water leak.

Make sure that the pockets of all the clothing items to be washed are empty.
- Hard, sharp objects such as coins, safety pins, nails, screws, or stones can cause extensive damage to the appliance.

Do not wash clothing with large buckles, buttons or other heavy metal objects.

Sort the laundry by color on the basis of its colorfastness and select the recommended cycle, water temperature and additional functions.
- This may result in discoloration or fabric damage.

Take care that children’s fingers are not caught in the door when you close it.
- Failure to do so may result in injury.

WD90J7400GW_03478B-02_EN(EU).indd 13 2015/12/15 14:03:46

Safety information

Critical cleaning warnings

⚠ **WARNING**

Do not clean the appliance by spraying water directly onto it.

Do not use the a strong acidic cleaning agent.

Do not use benzene, thinner or alcohol to clean the appliance.
- This may result in discolouration, deformation, damage, electric shock or fire.

Before cleaning or performing maintenance, unplug the appliance from the wall socket.
- Failure to do so may result in electric shock or fire.

Instructions about the WEEE

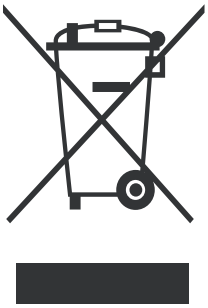

Correct Disposal of This Product (Waste Electrical & Electronic Equipment)

(Applicable in countries with separate collection systems)

This marking on the product, accessories or literature indicates that the product and its electronic accessories (e.g. charger, headset, USB cable) should not be disposed of with other household waste at the end of their working life. To prevent possible harm to the environment or human health from uncontrolled waste disposal, please separate these items from other types of waste and recycle them responsibly to promote the sustainable reuse of material resources.
Household users should contact either the retailer where they purchased this product, or their local government office, for details of where and how they can take these items for environmentally safe recycling.
Business users should contact their supplier and check the terms and conditions of the purchase contract. This product and its electronic accessories should not be mixed with other commercial wastes for disposal.
For information on Samsung's environmental commitments and product specific regulatory obligations e.g. REACH visit: samsung.com/uk/aboutsamsung/samsungelectronics/corporatecitizenship/data_corner.html

WD90J7400GW_03478B-02_EN(EU).indd 14 2015/12/15 14:03:46

Installation

Follow these instructions carefully to ensure proper installation of the washing machine and to prevent accidents when doing laundry.

What's included

Make sure all the parts are included in the product package. If you have a problem with the washing machine or the parts, contact a local Samsung customer centre or the retailer.

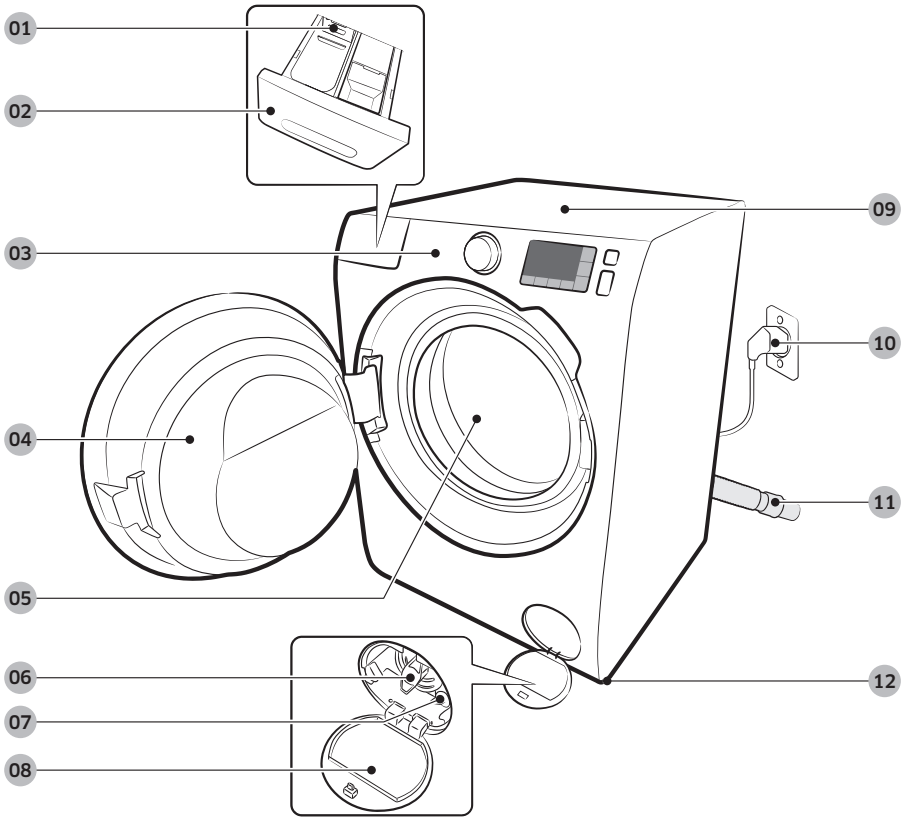

01 Release lever	**02** Detergent drawer	**03** Control panel
04 Door	**05** Drum	**06** Lint filter
07 Emergency drain tube	**08** Filter cover	**09** Worktop
10 Power plug	**11** Drain hose	**12** Levelling feet

WD90J7400GW_03478B-02_EN(EU).indd 15 2015/12/15 14:03:46

Installation

Spanner

Bolt caps

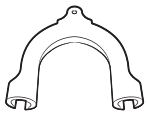

Hose guide

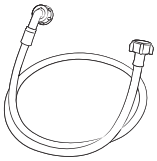

Cold water hose

Hot water hose

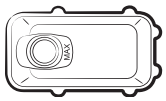

Liquid detergent container

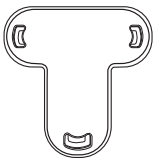

Cap fixer

NOTE

- Bolt caps : The provided number (3 to 6) of bolt caps depends on the model.
- Hot water hose: Applicable models only.
- Liquid detergent container: Applicable models only.

WD90J7400GW_03478B-02_EN(EU).indd 16 2015/12/15 14:03:47

Installation requirements

Electrical supply and grounding

- AC 220-240 V / 50 Hz fuse or circuit breaker is required
- Use an individual branch circuit specific to the washing machine

To ensure proper grounding, the washing machine comes with a power cord featuring a three-prong grounding plug for use in a properly installed and grounded outlet. Check with a qualified electrician or serviceperson if you are not sure about the grounding.
Do not modify the provided plug. If it does not fit the outlet, call a qualified electrician to install a proper outlet.

⚠ **WARNING**

- Do NOT use an extension cord.
- Use only the power cord that comes with the washing machine.
- Do NOT connect the ground wire to plastic plumbing, gas lines, or hot water pipes.
- Improperly connected grounding conductors may cause electric shock.

Water supply

A proper water pressure for this washing machine is between 50 kPa and 800 kPa. Water pressure less than 50 kPa may cause the water valve not to close completely. Or, it may take longer to fill the drum, causing the washing machine to turn off. Water taps must be within 120 cm from the rear of the washing machine so that the provided inlet hoses reach the washing machine.
To reduce the risk of leaks:

- Make sure water taps are easily accessible.
- Turn off the taps when the washing machine is not in use.
- Check for any leaks at the water inlet hose fittings on a regular basis.

⚠ **CAUTION**

Before using the washing machine for the first time, check all connections at the water valve and taps for any leaks.

Drain

Samsung recommends a standpipe in height of 60~90 cm. The drain hose must be connected through the hose clip to the standpipe, and the standpipe must fully cover the drain hose.

WD90J7400GW_03478B-02_EN(EU).indd 17 2015/12/15 14:03:47

Installation

Flooring

For best performance, the washing machine must be installed on a solid floor. Wood floors may need to be reinforced to minimize vibration and/or unbalanced loads. Carpeting and soft tile surfaces are not a good resistance to vibrations and may cause the washing machine to move slightly during the spin cycle.

⚠ **CAUTION**

Do NOT install the washing machine on a platform or a poorly supported structure.

Water temperature

Do not install the washing machine in areas where water may freeze as the washing machine always retains some water in its water valves, pumps, and/or hoses. Frozen water left in the connection parts may cause damage to belts, the pump, and other components of the washing machine.

Alcove or closet installation

Minimum clearance for stable operation:

Sides	25 mm	Rear	50 mm
Top	25 mm	Front	550 mm

If both the washing machine and a dryer are installed in the same location, the front of the alcove or closet must have at least a 550 mm unobstructed air opening. Your washing machine alone does not require a specific air opening.

WD90J7400GW_03478B-02_EN(EU).indd 18 2015/12/15 14:03:47

Step-by-step installation

STEP 1 Select a location

Location requirements:

- Solid, level surface without carpeting or flooring that may obstruct ventilation
- Away from direct sunlight
- Adequate room for ventilation and wiring
- The ambient temperature is always higher than the freezing point (0 ˚C)
- Away from a heat source

STEP 2 Remove the shipping bolts

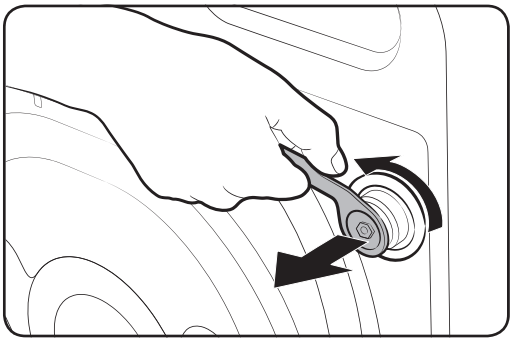

Unpack the product package and remove all shipping bolts.

1. Loosen all shipping bolts on the rear of the machine using the supplied spanner.

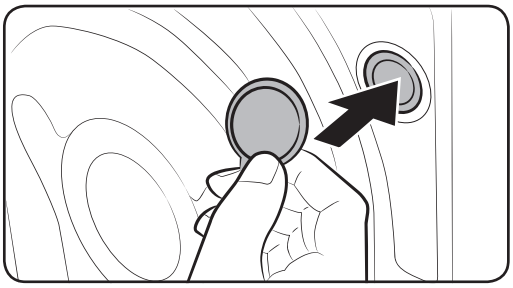

2. Fill the holes with the supplied plastic bolt caps.
   Keep the shipping bolts for future use.

⚠ **WARNING**

Packaging materials can be dangerous to children. Dispose all packaging material (plastic bags, polystyrene, etc.) out of children's reach.

WD90J7400GW_03478B-02_EN(EU).indd 19 2015/12/15 14:03:47

Installation

STEP 3 Adjust the levelling feet

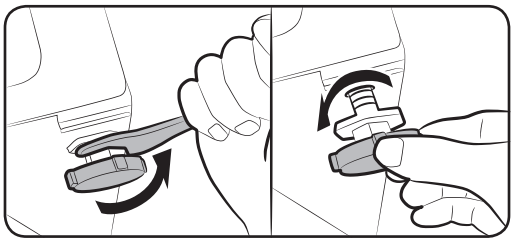

1. Gently slide the washing machine into position. Excessive force may damage the levelling feet.
2. Level the washing machine by manually adjusting the levelling feet.

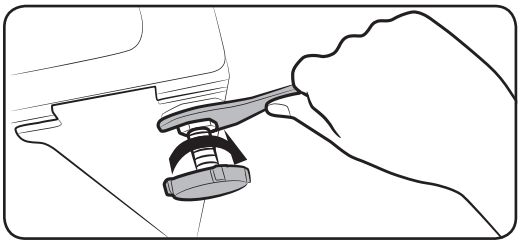

3. When levelling is complete, tighten the nuts using the spanner.

STEP 4 Connect the water hose

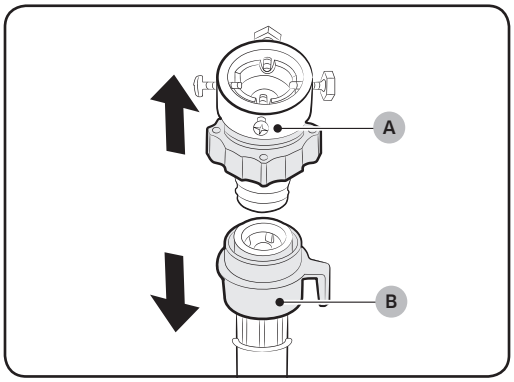

Connect the water hose to the water tap.

1. Remove the **adaptor (A)** from the **water hose (B)**.

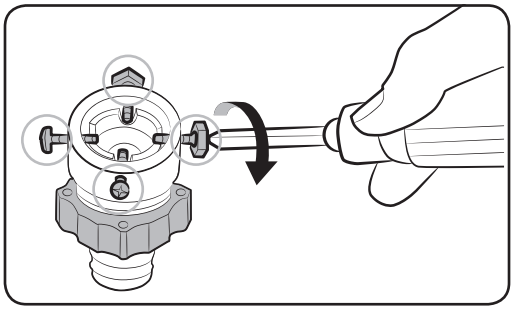

2. Use a Philips screwdriver to loosen four screws on the adaptor.

WD90J7400GW_03478B-02_EN(EU).indd 20 2015/12/15 14:03:48

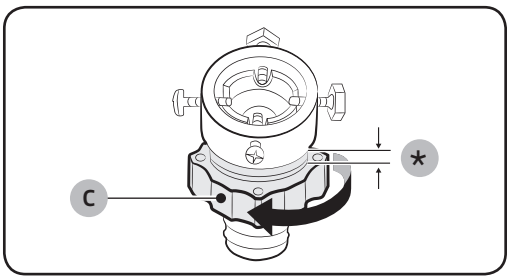

3. Hold the adaptor and turn **part (C)** in the arrow direction to loosen it by 5 mm (*).

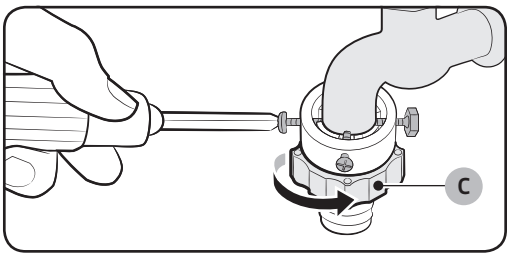

4. Insert the adaptor into the water tap, and tighten the screws while lifting up the adaptor.
5. Turn **part (C)** in the arrow direction to tighten it.

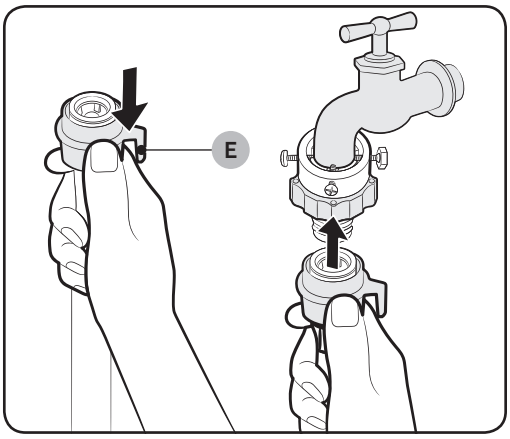

6. While holding down **part (E)**, connect the water hose to the adaptor. Then, release **part (E)**. The hose fits into the adaptor with a clicking sound.

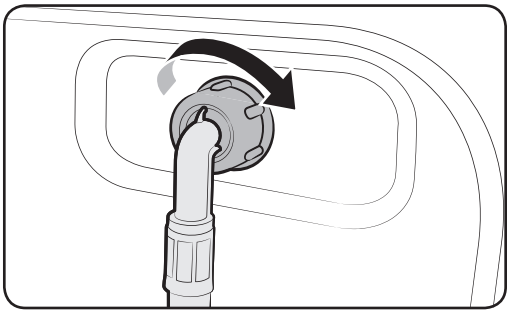

7. Connect the other end of the water hose to the inlet valve on the back of the washing machine. Turn the hose clockwise to tighten.

WD90J7400GW_03478B-02_EN(EU).indd 21 2015/12/15 14:03:48

Installation

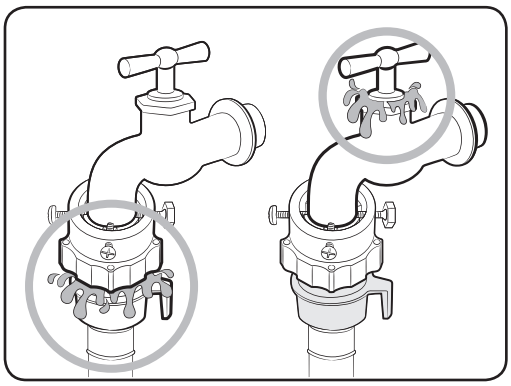

8. Open the water tap and check if there are any leaks around the connection areas. If there are water leaks, repeat the steps above.

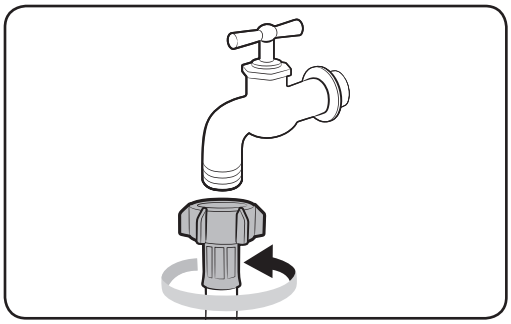

- If using a screw type of water tap, connect the water hose to the water tap as shown.

WARNING

Stop using the washing machine if there is a water leak, and contact a local Samsung service centre. Otherwise, this may cause electric shock.

CAUTION

Do not stretch the water hose by force. If the hose is too short, replace the hose with a longer, high-pressure hose.

NOTE

- After connecting the water hose to the adaptor, check if it is connected properly by pulling the water hose downwards.
- Use a popular type of water taps. If the tap is square-shaped or too big, remove the spacer ring before inserting the tap into the adaptor.

WD90J7400GW_03478B-02_EN(EU).indd 22 2015/12/15 14:03:49

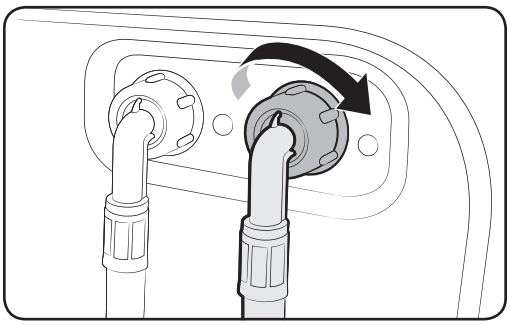

For models with an additional hot water inlet:

1. Connect the red end of the hot water hose to the hot water inlet on the back of the machine.
2. Connect the other end of the hot water hose to the hot water tap.

Aqua hose (applicable models only)

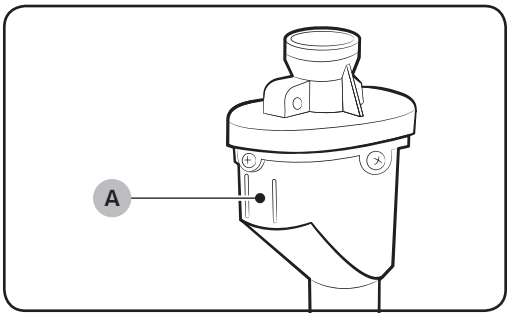

The aqua hose alerts users of a risk of water leaks. It senses the water flow and turns red on the centre **indicator (A)** in case of a leak.

WD90J7400GW_03478B-02_EN(EU).indd 23 2015/12/15 14:03:49

Installation

STEP 5 Position the drain hose

The drain hose can be positioned in three ways:

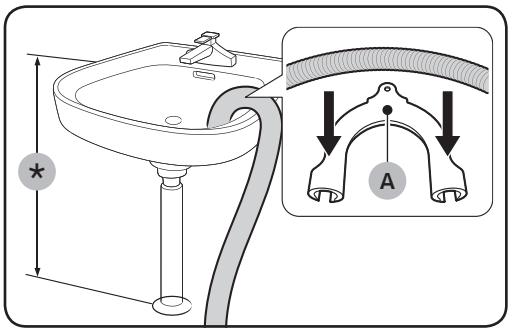

Over the edge of a wash basin

The drain hose must be placed at a height of between 60 cm and 90 cm (*) from the floor. To keep the spout of the drain hose bent, use the supplied **plastic hose guide (A)**. Secure the guide to the wall using a hook to ensure stable drainage.

In a sink drain pipe

The drain pipe must be above the sink siphon so that the end of the hose is at least 60 cm above the floor.

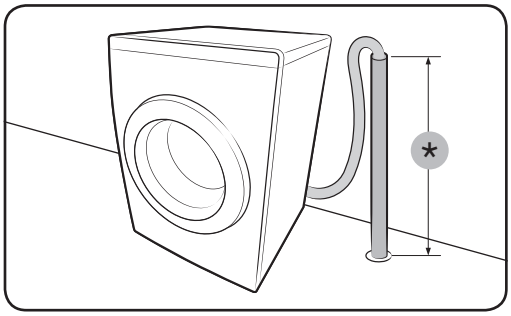

In a drain pipe

The drain pipe should be between 60 cm and 90 cm high **(*)**. It is advisable to use a 65 cm high vertical pipe. Make sure the drain hose is connected to the stand pipe at a slant.

Drain standpipe requirements:

- Minimum diameter of 5 cm
- Minimum carry-away capacity of 60 litres per minute

STEP 6 Power on

Plug the power cord into a wall socket featuring an AC 220-240 V / 50 Hz approved electrical outlet protected by a fuse or circuit breaker. Then, press **Power** to turn on the washing machine.

WD90J7400GW_03478B-02_EN(EU).indd 24 2015/12/15 14:03:49

Before you start

Initial settings

Run Calibration (recommended)

Calibration ensures accurate weight detection by the washing machine. Make sure the drum is empty before running Calibration.

1. Power off, and then power on the washing machine.
2. Hold down **Temp.** and **Delay End** simultaneously for 3 seconds to enter Calibration mode. The “**CB**” message appears.
3. Press **Start/Pause** to run the Calibration cycle.
4. The drum will rotate clockwise and counter-clockwise for about 3 minutes.
5. When the cycle is complete, “**END**” appears on the display and the washing machine will turn off automatically.
6. The washing machine is now ready for use.

WD90J7400GW_03478B-02_EN(EU).indd 25 2015/12/15 14:03:49

Before you start

Laundry guidelines

STEP 1 Sort

Sort the laundry according to these criteria:

- Care Label: Sort the laundry into cottons, mixed fibres, synthetics, silks, wools, and rayon.
- Colour: Separate whites from colours.
- Size: Mixing different-sized items together in the drum improves the washing performance.
- Sensitivity: Wash delicate items separately using an Easy Iron option for pure, new woollen items, curtains, and silk items. Check the labels on the items.

NOTE

Make sure to check the care label on the clothing, and sort them accordingly before starting the wash.

STEP 2 Empty pockets

Empty all the pockets of your laundry items

- Metal objects such as coins, pins, and buckles on clothing may damage other laundry items as well as the drum.

Turn clothing with buttons and embroideries inside out

- If pants or jacket zippers are open while washing, the drum may be damaged. Zippers should be closed and fixed with a string.
- Clothing with long strings may become entangled with other clothes. Make sure to tie the strings before starting the wash.

STEP 3 Use a laundry net

- Brassieres (water washable) must be placed in a laundry net. Metal parts of the brassieres may break through and tear other laundry items.
- Small, light clothing such as socks, gloves, stockings, and handkerchiefs may become caught around the door. Place them inside a fine laundry net.
- Do not wash the laundry net by itself without other laundry. This may cause abnormal vibrations that could move the washing machine and result in injury.

WD90J7400GW_03478B-02_EN(EU).indd 26 2015/12/15 14:03:50

STEP 4 Prewash (if necessary)

Select the Prewash option for the selected course if the laundry is heavily soiled. Do not use the Prewash option when detergent is manually added into the drum.

STEP 5 Determine the load capacity

Do not overload the washing machine. Overloading may cause the washing machine to not wash properly. For the load capacity for the type of clothing, see page 35.

NOTE

When washing bedding or bedding covers, the wash time may be lengthened or the spin efficiency may be reduced. For bedding or bedding covers, the recommended maximum spin cycle speed is 800 rpm, and the load capacity is 2 kg or less.

CAUTION

If the laundry is unbalanced and the "UB" information code is displayed, redistribute the load. Unbalanced laundry may reduce the spinning performance.

STEP 6 Apply a proper detergent type

The type of detergent depends on the type of fabric (cotton, synthetic, delicate items, wool), colour, wash temperature, and degree of soiling. Always use "low suds" laundry detergent, which is designed for automatic washing machines.

NOTE

- Follow the detergent manufacturer's recommendations based on the weight of the laundry, the degree of soiling, and the hardness of the water in your local area. If you are not sure about the water hardness, contact a local water authority.
- Do not use detergent that tends to be hardened or solidified. This detergent may remain after the rinse cycle, blocking the drain outlet.

CAUTION

When washing wool using the wool course, use only a neutral liquid detergent. If used with the Wool course, powder detergent may remain on the laundry and discolour the laundry.

WD90J7400GW_03478B-02_EN(EU).indd 27 2015/12/15 14:03:50

Before you start

Detergent drawer guidelines

The washing machine provides a three-compartment dispenser: the left compartment for the main wash, the front-right for fabric softeners, and the rear-right for the preliminary wash.

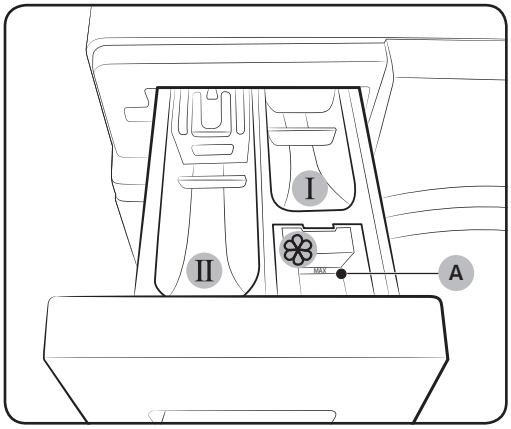

01 I **Prewash compartment:** Apply prewash detergent or starch.

02 II **Main-wash compartment:** Apply main-wash detergent, water softener, soaking detergent, bleach, and/or stain removers.

03 ❀ **Softener compartment:** Apply additives such as fabric softener. Do not exceed the **max line (A)**.

⚠ **CAUTION**

- Do not open the detergent drawer while the washing machine is operating.
- Do not use the following types of detergent:
  - Tablet or capsule types
  - Ball or net types
- To prevent the compartment clogging, concentrated or highly-enriched agents (fabric softener or detergent) must be diluted with water before being applied.

To apply washing agents to the detergent drawer

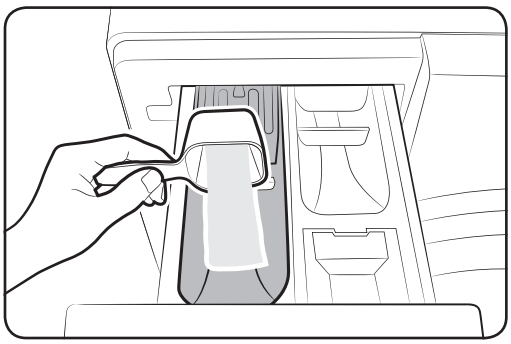

1. Slide open the detergent drawer.
2. Apply laundry detergent to the II. **main-wash compartment** as instructed or recommended by the manufacturer. To use liquid detergent, see page **30.**

WD90J7400GW_03478B-02_EN(EU).indd 28 2015/12/15 14:03:50

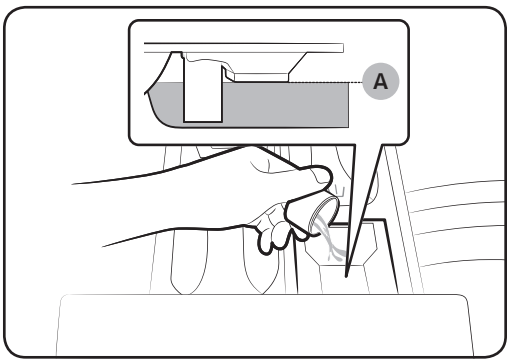

3. Apply fabric softener to the softener compartment. Do not exceed the max line (A).

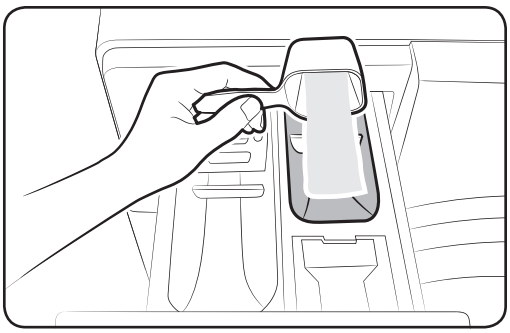

4. If you want to prewash, apply prewash detergent to the I prewash compartment as instructed or recommended by the manufacturer.
5. Close the detergent drawer.

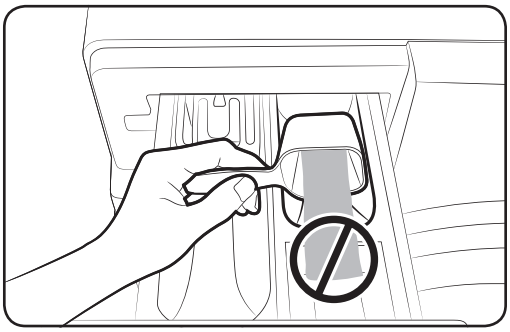

⚠ **CAUTION**

- Do not apply powder detergent to the liquid container.
- Concentrated fabric softener must be diluted with water before applied.
- Do not apply main-wash detergent to the softener compartment.

WD90J7400GW_03478B-02_EN(EU).indd 29 2015/12/15 14:03:50

Before you start

To use liquid detergent (applicable models only)

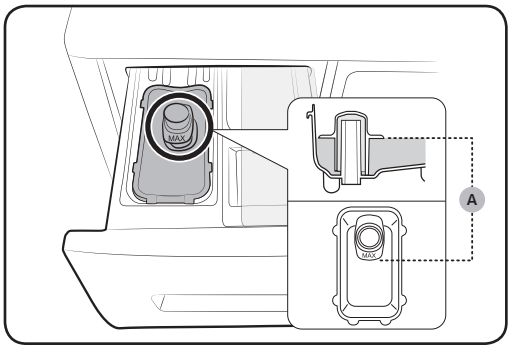

First insert the provided liquid container in the Ⅱ **main-wash compartment**. Then, apply liquid detergent to the container below the marked **max line (A)**.

⚠ **CAUTION**

- Do not exceed the max line that is marked inside the container.
- Remove the liquid container if using powder detergent.

WD90J7400GW_03478B-02_EN(EU).indd 30 2015/12/15 14:03:51

Operations

Control panel

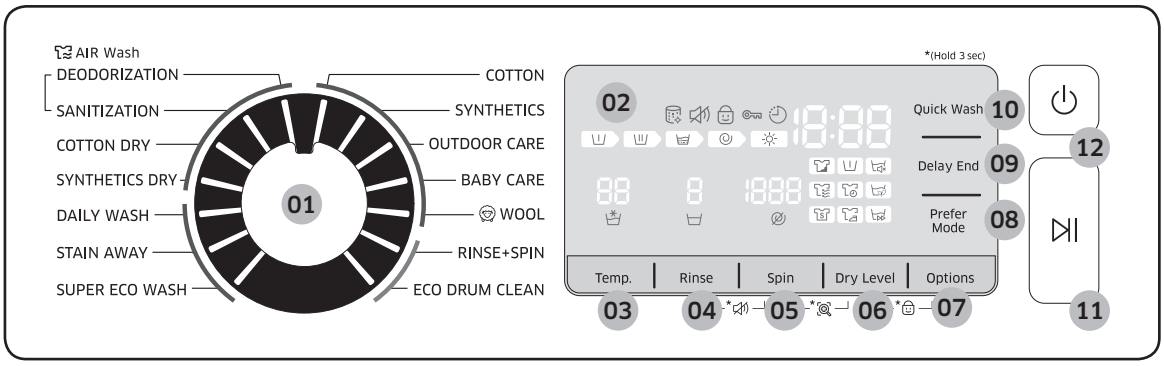

01 Course Selector	Turn the dial to select a course.
02 Display	The display shows current course information and estimated time remaining, or an information code when a problem occurs.
03 Temp.	Press to change the water temperature for the current course.
04 Rinse	Press to change the rinse count for the current cycle. You can set the rinse count to a max of 5.
05 Spin	Press to change the spinning speed for the current course. • Rinse Hold : The final rinse cycle is suspended so that the laundry remains in the water. To unload the laundry, run a drain or spin cycle. • No Spin : The drum does not spin after the final drain cycle. • If you wan to perform spin only, select Rinse+Spin cycle and set the rinse times to “0” (No number is appears on the display), then start to perform spin only.
06 Dry Level	Press this button to select proper drying option.
07 Options	Press to select an option from Intensive, Prewash, and Intensive+Prewash. Press again to deselect.
08 Prefer Mode	Press to enter custom options screen. 3 custom options are available but multiple selection is not allowed.

WD90J7400GW_03478B-02_EN(EU).indd 31 2015/12/15 14:03:51

Operations

09 Delay End	Delay End lets you set the end time of the current cycle. Based on your settings, the start time of the cycle will be determined by the machine's internal logic. For example, this setting is useful for programming your machine to finish a wash at the time you normally return home from work. • Press to choose a preset unit of hours.
10 Quick Wash	For lightly soiled garments in less than 2 kg that you want to wash quickly.
11 Start/Pause	Press to start or stop operation.
12 Power	Press to turn on/off the washing machine.

WD90J7400GW_03478B-02_EN(EU).indd 32 2015/12/15 14:03:51

Simple steps to start

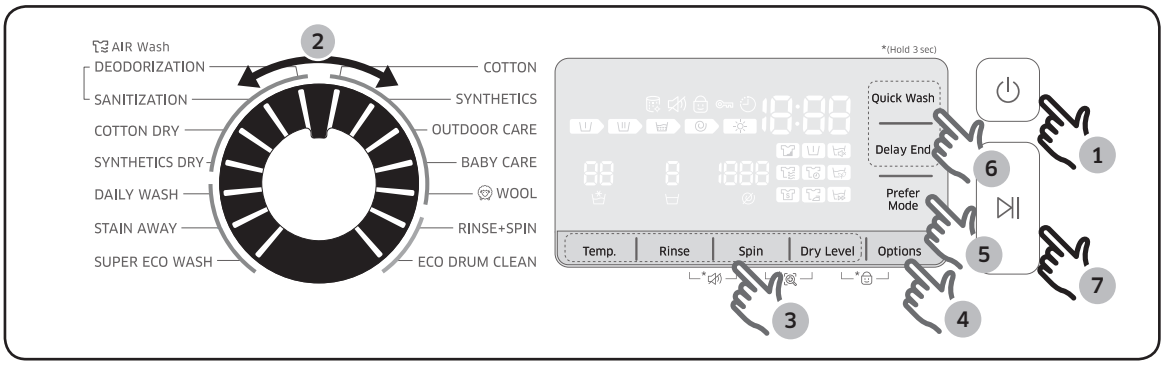

1. Press **Power** to turn on the washing machine.
2. Turn the **Course Selector** to select a course.
3. Change the course settings (**Temp.**, **Rinse**, **Spin** and **Dry Level**) as necessary.
4. To add an option, press **Options**. Use the button again to choose a preferred item.
5. To select a preferred mode, press the **Prefer Mode** button repeatedly until the corresponding mode icon turns on.
6. The machine provides two easy to access buttons for **Quick Wash** and **Delay End** for your convenience. If you want to use one of these options, press the corresponding button.
7. Press **Start/Pause**.

To change the course during operation

1. Press **Start/Pause** to stop operation.
2. Select a different course.
3. Press **Start/Pause** again to start the new course.

WD90J7400GW_03478B-02_EN(EU).indd 33 2015/12/15 14:03:52

Operations

Dry clothes Only

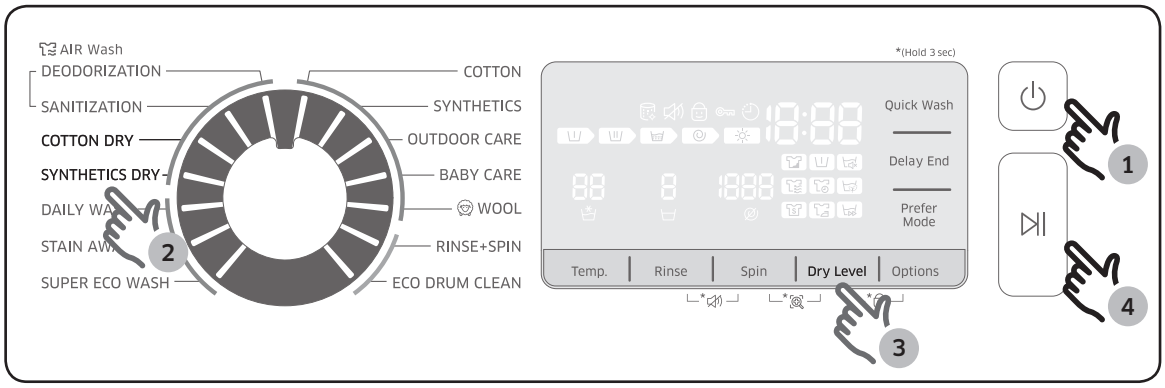

You can dry your clothes directly or dry the washed clothes according to the following procedures.

1. Press **Power** button to turn on the washing machine.
2. Turn the Course Selector to select the appropriate drying cycle.
3. Press **Dry Level** button to select the appropriate drying mode.
4. Press **Start/Pause** button to start dry.

WD90J7400GW_03478B-02_EN(EU).indd 34 2015/12/15 14:03:52

Course overview

Standard courses

Course	Description	Max load (kg)
COTTON	• For cottons, bed linens, table linens, underwear, towels, or shirts. The washing time and the number of rinse cycles are automatically adjusted according to the load.	Max
SYNTHETICS	• For blouses or shirts that are made of polyester (diolen, trevira), polyamide (perlon, nylon), or the like.	3.5
OUTDOOR CARE	• For outdoor clothes, skiwear, and sportswear that are made of functional materials such as spandex, stretch, and microfibre.	2
BABY CARE	• Featuring a high-temperature wash and extra rinses to ensure that no powder detergent remains.	4
WOOL	• Specific for machine-washable wool for loads less than 2 kg. • The wool course features gentle cradling and soaking to protect the wool fibres from shrinkage/distortion. • A neutral detergent is recommended.	2
RINSE+SPIN	• Featuring an additional rinse after applying fabric softener to the laundry.	-
ECO DRUM CLEAN	• Cleans the drum by removing dirt and bacteria from the drum. • Perform once every 40 washes with no detergent or bleach applied. • Make sure the drum is empty. • Do not use any cleaning agents for cleaning the drum.	-

WD90J7400GW_03478B-02_EN(EU).indd 35 2015/12/15 14:03:52

Operations

Course	Description	Max load (kg)
AIR WASH	• This course is useful for removing bad odors. Turning the Cycle Selector cycles through the following operating modes.(Deodorization > Sanitization) • **DEODORIZATION -** Reduces bad smells from the laundry. • **SANITIZATION -** Deodorize and sanitize the laundry by stronger AIR Wash action with higher temp.	-
COTTON DRY	• For general drying.	6
SYNTHETICS DRY	• A low temperature drying cycle for heat-sensitive garments.	3
DAILY WASH	• For everyday items such as underwear and shirts.	4
STAIN AWAY	• Featuring the soaking cycle to effectively remove stains from the laundry. During the soaking cycle, the drum stops rotating. This is not a system failure.	4
SUPER ECO WASH	• Low-temperature Eco Bubble contributes to power saving.	4

WD90J7400GW_03478B-02_EN(EU).indd 36 2015/12/15 14:03:52

Options

Option		Description
	Intensive	• For badly soiled laundry. The operation time for each cycle is longer than normal.
	Pre Wash	• This will add a preliminary washing cycle before the main wash cycle.
-	Quick Wash	• Specific to less soiled garments with less than a 2 kg load. • It takes a minimum of about 15 minutes, depending on the conditions such as the water pressure, water hardness, and/or extra options selected. • The Quick Wash time increases in this sequence: Off > 15 min > 20 min > 30 min > 40 min > 50 min > 60 min. • A recommended amount of detergent is less than 20 g (for a 2 kg load)

Prefer Mode

Option		Description
	Speed Wash	• This changes the program settings to reduce the overall washing time. • The recommended laundry load is less than 4.0 kg for the COTTON program with Speed Wash enabled.
	Eco Wash	• This changes the program settings to save the overall power consumption.
	Silent Wash	• This changes the program settings to reduce operating noise and vibration.

WD90J7400GW_03478B-02_EN(EU).indd 37 2015/12/15 14:03:53

Operations

Delay End

You can set the washing machine to finish your wash automatically at a later time, choosing a delay of between 1 to 19 hours (in 1 hour increments). The hour displayed indicates the time the wash will finish.

1. Select a course. Then change the cycle settings if necessary.
2. Press **Delay End** repeatedly until a desired end time is set.
3. Press **Start/Pause**.
   The corresponding indicator turns on with the clock running.
4. To cancel the **Delay End**, restart the washing machine by pressing **Power**.

Real-life case

You want to finish a two-hour course 3 hours later from now. For this, you add the Delay End option to the current cycle with the 3-hour setting, and press **Start/Pause** at 2:00 p.m. Then, what happens? The washing machine starts operating at 3:00 p.m., and ends at 5:00 p.m. Provided below is the time line for this example.

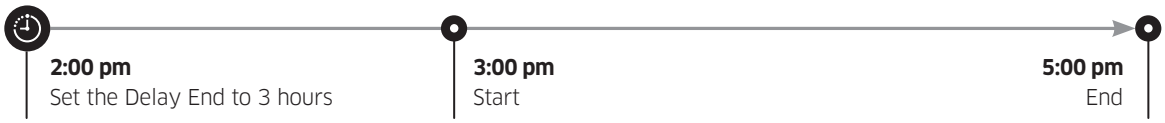

WD90J7400GW_03478B-02_EN(EU).indd 38 2015/12/15 14:03:53

Settings

Child Lock

To prevent accidents involving children, the Child Lock function locks all buttons. However, Child Lock does not activate until you press **Start/Pause**.
In the holding state, you can open the door or change settings by pressing corresponding buttons. However, once you press **Start/Pause** to start the washing machine, the Child Lock will be reactivated.

- Child Lock locks all buttons except for **Power**.
- To activate or deactivate Child Lock, hold down **Dry Level** and **Options** simultaneously for 3 seconds.

NOTE

To add detergent, put more laundry in the drum, or change the cycle settings whilst in the Child Lock state, you must first deactive the Child Lock.

Sound On/Off

You can turn on or off the key. Your setting will remain effective after you restart the machine.

- To mute the sound, hold down **Rinse** and **Spin** simultaneously for 3 seconds.
- To unmute the sound, hold down again for 3 seconds.

WD90J7400GW_03478B-02_EN(EU).indd 39 2015/12/15 14:03:53

Maintenance

Keep the washing machine clean to prevent deteriorated performance and to preserve its life cycle.

Eco Drum Clean

Perform this course regularly to clean the drum and to remove bacteria from it.

1. Press **Power** to turn on washing machine.
2. Turn the **Cycle Selector** to select **ECO DRUM CLEAN**.
3. Press **Start/Pause**.

NOTE

The water temperature for ECO DRUM CLEAN is set to 70 °C, which cannot be changed.

CAUTION

Do not use any cleaning agents for cleaning the drum. Chemical residue in the drum deteriorates the washing performance.

ECO DRUM CLEAN reminder

- The ECO DRUM CLEAN reminder appears on the main screen once every 40 washes. It is advisable to perform the ECO DRUM CLEAN regularly.
- When you first see this reminder, you can ignore the reminder for 6 consecutive times. From the 7th wash, the reminder does not appear. However, it appears again on the second 40th wash.

WD90J7400GW_03478B-02_EN(EU).indd 40 2015/12/15 14:03:53

Smart check

To enable this function, you must first download the Samsung Smart Washer app at the Play Store or the Apple Store, and install it on a mobile device featuring a camera function.

The Smart Check function has been optimized for Galaxy & iPhone series (applicable models only).

1. Press and hold Spin and Dry Level simultaneously for 3 seconds to enter the Smart Check mode.
2. The washing machine starts the self-diagnosis procedure and displays an information code if a problem is detected.
3. Run the Samsung Smart Washer app on your mobile device, and tap Smart Check.
4. Put the mobile device close to the washing machine's display so that the mobile device and the washing machine face each other. Then, the information code will be recognized automatically by the app.
5. When the information code is recognized correctly, the app provides detailed information about the problem with applicable counteractions.

NOTE

- The function name, Smart Check, may differ depending on the language.
- If the washing machine reflets light on the display, the app may fail to recognize the information code.
- If the app fails to recognize the Smart Check code consecutively, enter the information code manually onto the app screen.

WD90J7400GW_03478B-02_EN(EU).indd 41 2015/12/15 14:03:53

Maintenance

USING DRY COURSE

All drying options except for the Time Dry option detect the weight of the laundry in order to display a more accurate drying time and dry the laundry more effectively.

Refer to the chart below to select the appropriate drying option according to the type and amount of laundry and the moisture you want to leave.

Mode	Drying option	Usage	Load capacity(kg)	
			Cotton Dry	Synthetics Dry
Auto Drying	Cupboard	Use this option to dry laundry such as cotton, underwear, and linen.	6 kg	3 kg
	Extra Dry	Use this option to dry heavy garments such as jeans, corduroys and towels.	6 kg	3 kg
	Iron	Use this option to finish the drying cycle in a moist state ideal for easy ironing.	6 kg	3 kg
Manual Drying	Time Dry	Use this option to dry the laundry for the specified peiod of time depending on the fibes, amount of laundry quantity and moisture.	30 ~ 270 min. (in 30 minutes increments).	30 ~ 270 min. (in 30 minutes increments).

NOTE

- The drying result may differ depending on the selected washing cycle and the type/amount of laundry.
- If both washing and drying cycles are selected, the spin speed is automatically set to enhance the drying efficiency.
- In case you want to dry laundry after a hand wash, turn the cycle selector to select the spin cycle, and then select a drying option for best performance.
- When drying is complete, dust from the dry surface of the clothes may remain on the diaphragm due to the ironing effect that prevents wrinkles. The dus will be washed away during the following wash. Alternatively, you can easily remove it with a damp towel or cloth.

CAUTION

- Do not use the drying function after applying a chlorine bleach agent to the laundry during a wash or drying cycle. Otherwise, the laundry may become discolored or the material may be damaged.
- Do not use the drying function for clothing with fur lining or made from acrylic material. This may result in the drying function being degraded.
- Do not touch the insides of the drum or the washing machine surface during or just after drying as it may be hot. This may result in burns.

WD90J7400GW_03478B-02_EN(EU).indd 42 2015/12/15 14:03:54

AIR WASH

The Air Wash function refreshes garments through Samsung's unique air-washing technology without the need for water.
Refer to the chart below for the usage and cycle time of each Air Wash cycle.

Cycle	Usage	Cycle time
Deodorization	Use this cycle to remove bad odors from the laundry.	29min
Sanitization	Use this cycle to remove bad odors and bacteria from the laundry.	59min

NOTE

- The recommended maximum load capacity for the Air Wash cycles is 1 kg or less (one or two items). If you overload the drum,, the deodorization or sanitization efficiey may be reduced.
- You can add a fragrance sheet to the laundry to add fragrance during the Air Wash cycle.

CAUTION

Do not use any Air Wash cycles for the following items

- Heat-sensitive garments made from leather, mink, fur, silk, etc.
- Underwear trimmed with lace, doll cushions, and trims on dress suits may become loose.
- Clothes trimmed with buttons can cause them to break.
- Clothes full of starch may become deformed.
- Hard bedding
- Electric blankets, furry or bulky blankets
- Latex pillows

WD90J7400GW_03478B-02_EN(EU).indd 43 2015/12/15 14:03:54

Maintenance

Emergency drain

In case of a power failure, drain the water inside the drum before taking out the laundry.

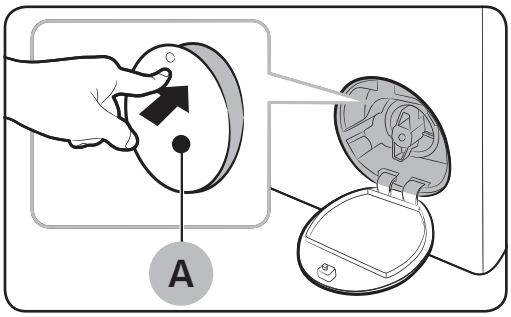

1. Power off and unplug the washing machine from the electrical outlet.
2. Gently press the top area of the **filter cover (A)** to open.

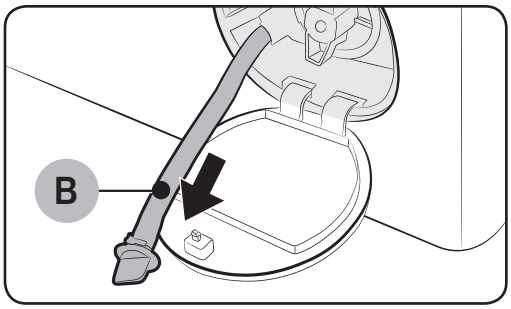

3. Gently pull out the **Emergency drain tube (B)**.

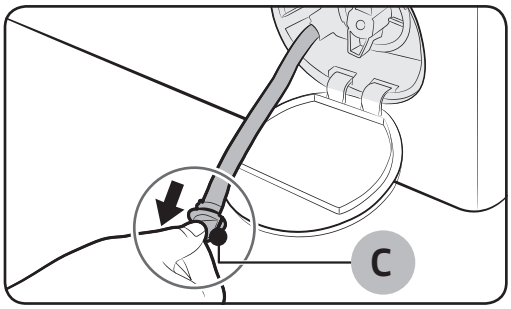

4. While holding the end of the drain tube, open the **tube cap (C)**.

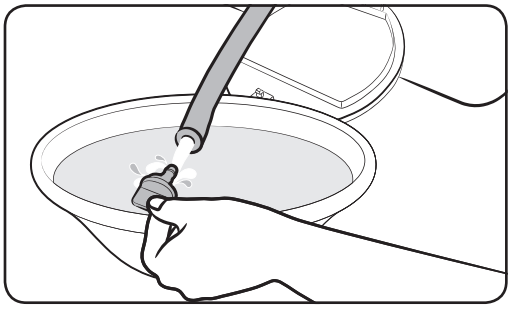

5. Let the water run into a container.
6. When done, close the tube cap, and reinsert the tube. Then, close the filter cover.

NOTE

Use a spacious container because the water in the drum may be more than expected.

WD90J7400GW_03478B-02_EN(EU).indd 44 2015/12/15 14:03:55

Cleaning

Surface of the washing machine

Use a soft cloth with a nonabrasive household detergent. Do not spray water onto the washing machine.

Mesh filter

Clean the mesh filter of the water hose once or twice a year.

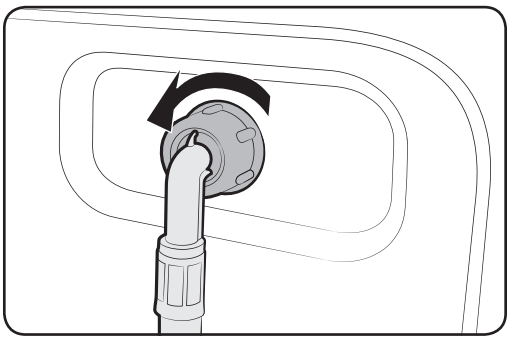

1. Turn off the washing machine, and unplug the power cord.
2. Close the water tap.
3. Loosen and disconnect the water hose from the back of the washing machine. Cover the hose with a cloth to prevent water from gushing out.

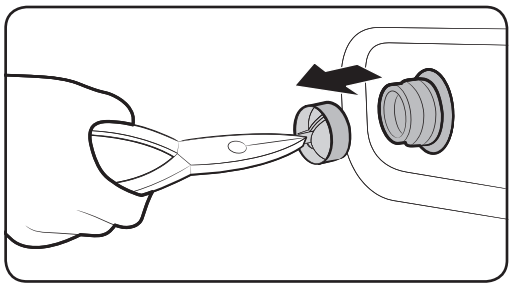

4. Use pliers to pull out the mesh filter from the inlet valve.
5. Submerge the mesh filter deeply in water so that the threaded connector is also submerged.
6. Dry the mesh filter completely in the shade.
7. Reinsert the mesh filter into the inlet valve, and reconnect the water hose to the inlet valve.
8. Open the water tap.

NOTE

If the mesh filter is clogged, an information code of “4C” appears on the screen.

WD90J7400GW_03478B-02_EN(EU).indd 45 2015/12/15 14:03:55

Maintenance

Pump filter

It is advisable to clean the pump filter 5 or 6 times a year to prevent its clogging. A clogged pump filter may reduce the bubble effect.

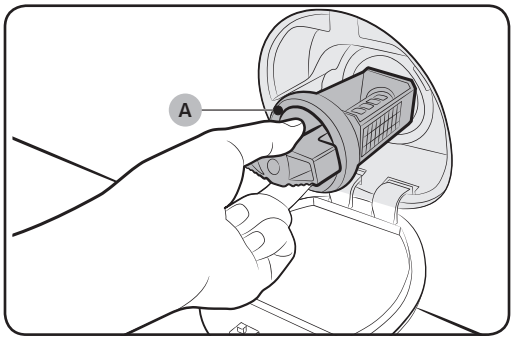

1. Turn off the washing machine, and unplug the power cord.
2. Drain the remaining water inside the drum by referring to "Emergency drain" on page 44.
3. Open the filter cover using a coin or key.
4. Turn the pump filter knob (A) to the left, and drain off the remaining water.

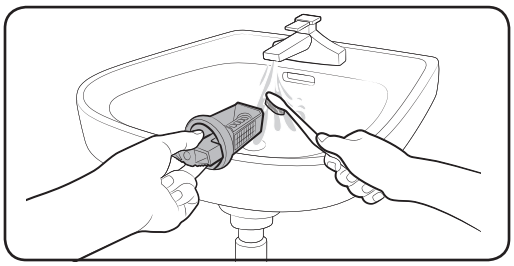

5. Clean the pump filter using soft brushes. Make sure the drain pump propeller inside the filter is unclogged.
6. Reinsert the pump filter, and turn the filter knob to the right.

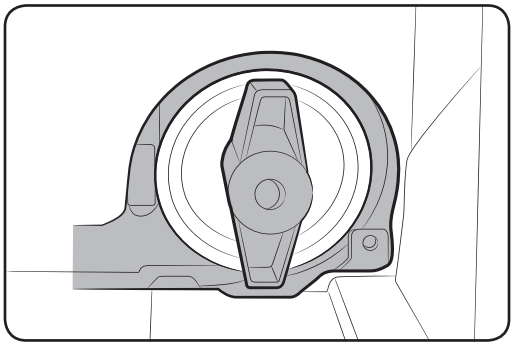

NOTE

- Some pump filters feature a safety knob that is designed to prevent accidents by children. To open the safety knob of the pump filter, push in and turn it anticlockwise. The spring mechanism of the safety knob helps open the filter.
- To close the safety knob of the pump filter, turn it clockwise. The spring makes a rattling sound, which is normal.

NOTE

If the pump filter is clogged, an information code of "5C" appears on the screen.

CAUTION

- Make sure the filter cap is closed properly after cleaning the filter. Otherwise, this may cause a leak.
- Make sure the filter is inserted properly after cleaning it. Otherwise, this may cause an operational failure or a leak.

WD90J7400GW_03478B-02_EN(EU).indd 46 2015/12/15 14:03:56

Detergent Drawer

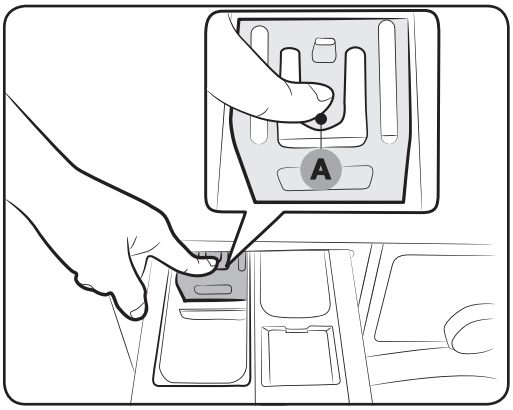

1. While holding down the **release lever (A)** on the inner of the drawer, slide open the drawer.
2. Remove the **release lever** and the **liquid detergent container** from the drawer.

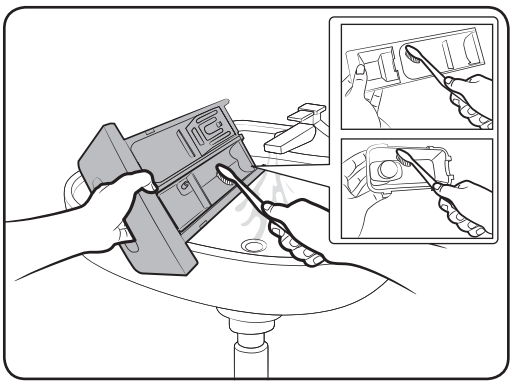

3. Clean the drawer components in flowing water using a soft brush.

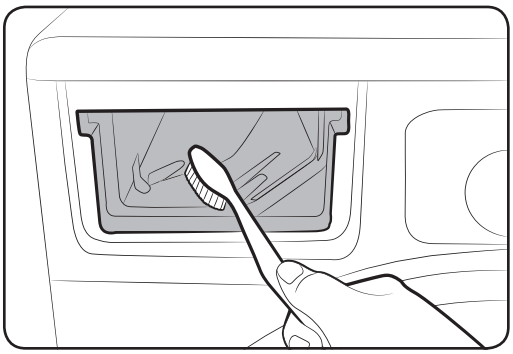

4. Clean the drawer recess using a soft brush.
5. Reinsert the **release lever** and the **liquid detergent container** to the drawer.
6. Slide the drawer inward to close it.

NOTE

To remove remaining detergent, perform the **RINSE+SPIN** course with the drum being empty.

WD90J7400GW_03478B-02_EN(EU).indd 47 2015/12/15 14:03:56

Maintenance

Recovery from freezing

The washing machine may freeze when it drops below 0 °C.

1. Turn off the washing machine, and unplug the power cord.
2. Pour warm water over the water tap to loosen the water hose.
3. Disconnect the water hose, and soak it in warm water.
4. Pour warm water into the drum and leave it for about 10 minutes.
5. Reconnect the water hose to the water tap.

NOTE

If the washing machine still doesn't operate normally, repeat the above steps until it operates normally.

Care against an extended time of disuse

Avoid leaving the washing machine unused for an extended time.
If this is the case, drain the washing machine and unplug the power cord.

1. Turn the Cycle Selector to select a RINSE+SPIN.
2. Empty the drum, and press Start/Pause.
3. When the cycle is complete, close the water tap and disconnect the water hose.
4. Turn off the washing machine, and unplug the power cord.
5. Open the door to let air circulate through the drum.

WD90J7400GW_03478B-02_EN(EU).indd 48 2015/12/15 14:03:56

Troubleshooting

Checkpoints

If you encounter a problem with the washing machine, first check the table below and try the suggestions.

Problem	Action
Does not start.	• Make sure the washing machine is plugged in. • Make sure the door is properly closed. • Make sure the water taps are open. • Make sure to press or tap Start/Pause to start the washing machine. • Make sure Child Lock is not activated. • Before the washing machine starts to fill, it will make a series of clicking noises to check the door lock and does a quick drain. • Check the fuse or reset the circuit breaker.
Water supply is insufficient, or no water is supplied.	• Fully open the water tap. • Make sure the door is properly closed. • Make sure the water supply hose is not frozen. • Make sure the water supply hose is not kinked or clogged. • Make sure there is sufficient water pressure.
After a cycle, detergent remains in the detergent drawer.	• Make sure the washing machine is running with sufficient water pressure. • Make sure the detergent is added to the centre of the detergent drawer. • Make sure the rinse cap is inserted properly. • If using granular detergent, make sure the detergent selector is in the upper position. • Remove the rinse cap and clean the detergent drawer.

WD90J7400GW_03478B-02_EN(EU).indd 49 2015/12/15 14:03:57

Troubleshooting

Problem	Action
Excessive vibrations or makes noise.	• Make sure the washing machine is installed on a level, solid floor that is not slippery. If the floor is not level, use the levelling feet to adjust the height of the washing machine. • Make sure the shipping bolts are removed. • Make sure the washing machine is not contacting any other object. • Make sure the laundry load is balanced. • The motor can cause noise during normal operation. • Overalls or metal-decorated clothes can cause noise while being washed. This is normal. • Metal objects such as coins can cause noise. After washing, remove these objects from the drum or filter case.
Does not drain and/ or spin.	• Make sure the drain hose is straightened all the way to the drain system. If you encounter a drain restriction, call for service. • Make sure the debris filter is not clogged. • Close the door and press or tap **Start/Pause**. For your safety, the washing machine will not tumble or spin unless the door is closed. • Make sure the drain hose is not frozen or clogged. • Make sure the drain hose is connected to a drain system that is not clogged. • If the washing machine is not supplied with sufficient power, the washing machine temporarily will not drain or spin. As soon as the washing machine regains sufficient power, it will operate normally.
The door does not open.	• Press or tap **Start/Pause** to stop the washing machine. • It may take a few moments for the door lock mechanism to disengage. • The door will not open until 3 minutes after the washing machine has stopped or the power turned off. • Make sure all the water in the drum is drained. • The door may not open if water remains in the drum. Drain the drum and open the door manually. • Make sure the door lock light is off. The door lock light turns off after the washing machine has drained.

WD90J7400GW_03478B-02_EN(EU).indd 50 2015/12/15 14:03:57

Problem	Action
Excessive suds.	• Make sure the Auto Detergent and Auto Softener settings are properly configured. • Make sure you use the recommended types of detergent as appropriate. • Use high efficiency (HE) detergent to prevent oversudsing. • Reduce the detergent amount for soft water, small loads, or lightly soiled loads. • Non-HE detergent is not recommended.
Cannot apply additional detergent.	• Make sure the remaining amount of detergent and fabric softener is not over the limit. • Make sure the Auto Dispense function is activated, with both the Water Hardness and Concentration settings properly specified.
Stops.	• Plug the power cord into a live electrical outlet. • Check the fuse or reset the circuit breaker. • Close the door and press or tap **Start/Pause** to start the washing machine. For your safety, the washing machine will not tumble or spin unless the door is closed. • Before the washing machine starts to fill, it will make a series of clicking noises to check the door lock and does a quick drain. • There may be a pause or soak period in the cycle. Wait briefly and the washing machine may start. • Make sure the mesh filter of the water supply hose at the water taps are not clogged. Periodically clean the mesh filter. • If the washing machine is not supplied with sufficient power, the washing machine temporarily will not drain or spin. As soon as the washing machine regains sufficient power, it will operate normally.

WD90J7400GW_03478B-02_EN(EU).indd 51 2015/12/15 14:03:57

Troubleshooting

Problem	Action
Fills with the wrong water temperature.	• Fully open both taps. • Make sure the temperature selection is correct. • Make sure the hoses are connected to the correct taps. Flush water lines. • Make sure the water heater is set to supply a minimum 120 °F (49 °C) hot water at the tap. Also, check the water heater capacity and recovery rate. • Disconnect the hoses and clean the mesh filter. The mesh filter may be clogged. • While the washing machine fills, the water temperature may change as the automatic temperature control feature checks incoming water temperature. This is normal. • While the washing machine fills, you may notice just hot and/or just cold water going through the dispenser when cold or warm temperatures are selected. This is a normal function of the automatic temperature control feature as the washing machine determines the water temperature.
Load is wet at the end of a cycle.	• Use the High or Extra High spin speed. • Use high efficiency (HE) detergent to reduce oversudsing. • Load is too small. Small loads (one or two items) may become unbalanced and not spin completely. • Make sure the drain hose is not kinked or clogged.
Leaks water.	• Make sure the door is properly closed. • Make sure all hose connections are tight. • Make sure the end of the drain hose is correctly inserted and secured to the drain system. • Avoid overloading. • Use high efficiency (HE) detergent to prevent oversudsing.
Has odours.	• Excessive suds collect in recesses and can cause foul odours. • Run cleansing cycles to sanitize periodically. • Clean the door seal (diaphragm). • Dry the washing machine interior after a cycle has finished.
No bubbles are seen (Bubbleshot models only).	• Overloading may screen bubbles. • Severely contaminated laundry may not generate bubbles.

WD90J7400GW_03478B-02_EN(EU).indd 52 2015/12/15 14:03:57

Problem	Action
Wi-Fi does not work (Wi-Fi models only).	• Make sure the Internet connection to your house is properly established. • Make sure the router turns on and operates normally. • Make sure you have installed the latest version of the Smart Control App.

If a problem persists, contact a local Samsung service centre.

WD90J7400GW_03478B-02_EN(EU).indd 53 2015/12/15 14:03:57

Troubleshooting

Information codes

If the washing machine fails to operate, you may see an information code on the screen. Check the table below and try the suggestions.

Problem	Action
4C	Water is not supplied. • Make sure the water taps are open. • Make sure the water hoses are not clogged. • Make sure the water taps are not frozen. • Make sure the washing machine is operating with sufficient water pressure. • Make sure that the cold water tap and the hot water tap are properly connected. • Clean the mesh filter as it may be clogged. **NOTE** When the washer displays the “4C” code, the washer do draining for 3 minutes. During this time, the Power button is inoperative.
4C2	• Make sure the cold water supply hose is firmly connected to the cold water tap. If it is connected to the hot water tap, the laundry may be deformed with some cycles.
5C	Water is not draining. • Make sure the drain hose is not frozen or clogged. • Make sure the drain hose is positioned correctly, depending on the connection type. • Clean the debris filter as it may be clogged. • Make sure the drain hose is straightened all the way to the drain system. • If the information code remains, contact a customer service centre.
DC	Operating the washer with the door open. • Make sure the door is properly closed. • Make sure laundry is not caught in the door.
OC	Water is overflowed. • Restart after spinning. • If the information code remains on the display, contact a local Samsung service centre.

WD90J7400GW_03478B-02_EN(EU).indd 54 2015/12/15 14:03:57

Problem	Action
LC	Check the drain hose. • Make sure the end of the drain hose is placed on the floor. • Make sure the drain hose is not clogged. • If the information code remains, contact a customer service centre.
LC1	**NOTE** When the washer displays the “LC”/“LC1” code, the washer do draining for 3 minutes. During this time, the Power button is inoperative.
UB	Spinning does not work. • Make sure laundry is spread out evenly. • Make sure the washing machine is on a flat, stable surface. • Redistribute the load. If only one item of clothing needs washing, such as a bathrobe or pair of jeans, the final spin result might be unsatisfactory, and an “UB” check message will be shown in the display.
3C	Check the Motor for operation. • Try restarting the cycle. • If the information code remains, contact a customer service centre.
UC	The electronic control needs to be checked (Over Voltage Error). • Check the PCB and wire harness. • Check if power is supplied properly. • If the information code remains, contact a customer service centre.
	Low voltage detected • Check if the power cord is plugged in. • If the information code remains, contact a customer service centre.
HC	High temperature heating check • If the information code remains, contact a customer service centre.

WD90J7400GW_03478B-02_EN(EU).indd 55 2015/12/15 14:03:57

Troubleshooting

Problem	Action
1C	The WaterLevel sensor is not working properly. • Try power off and restarting the cycle. • Check WaterLevel Sensor wire harness. • If the information code remains, contact a customer service centre. **NOTE** When the washer displays the “1C” code, the washer do draining for 3 minutes. During this time, the Power button is inoperative.
AC	Check communications between main and sub PBAs. • Try power off and restarting the cycle. • If the information code remains, contact a customer service centre.

If any information code keeps appearing on the screen, contact a local Samsung service centre.

WD90J7400GW_03478B-02_EN(EU).indd 56 2015/12/15 14:03:57

Specifications

Fabric care chart

The following symbols provide garment care directions. The care labels include four symbols in this order: washing, bleaching, drying and ironing (and dry cleaning when necessary). The use of symbols ensures consistency among garment manufacturers of domestic and imported items. Follow the care label directions to maximize garment life and reduce laundry problems.

	Resistant material		Do not iron
	Delicate fabric	A	Can be dry cleaned using any solvent
95 95	Item can be washed at 95 ˚C		Dry Clean
60 60	Item can be washed at 60 ˚C	P	Dry clean with perchloride, lighter fuel, pure alcohol or R113 only
40 40	Item can be washed at 40 ˚C	F	Dry clean with aviation fuel, pure alcohol or R113 only
30 30	Item can be washed at 30 ˚C		Do not dry clean
	Hand wash only		Dry flat
	Dry clean only		Can be hung to dry
Cl	Can be bleached in cold water		Dry on clothes hanger
	Do not bleach		Tumble dry, normal heat
	Can be ironed at 200 ˚C max		Tumble dry, reduced heat
	Can be ironed at 150 ˚C max		Do not tumble dry
	Can be ironed at 100 ˚C max		

WD90J7400GW_03478B-02_EN(EU).indd 57 2015/12/15 14:03:59

Specifications

Protecting the environment

- This appliance is manufactured from recyclable materials. If you decide to dispose of this appliance, please observe local waste disposal regulations. Cut off the power cord so that the appliance cannot be connected to a power source. Remove the door so that animals and small children cannot get trapped inside the appliance.
- Do not exceed the detergent quantities recommended in the detergent manufacturer's instructions.
- Use stain removal products and bleaches before the wash cycle only when strictly necessary.
- Save water and electricity by only washing full loads (the exact amount depends upon the program used).

WD90J7400GW_03478B-02_EN(EU).indd 58 2015/12/15 14:03:59

Specification sheet

“ * ” Asterisk(s) means variant model and can be varied (0-9) or (A-Z).

Type			Front loading washing machine
Model name			WD90J7*****
Dimensions			W600 x D650 x H850 (mm)
Water pressure			50 kPa ~ 800 kPa
Water volume			63 L
NET weight			72 kg
Wash and spin capacity			9.0 kg
Dry capacity			6.0 kg
Power consumption	Washing	220 V	100 W
		240 V	100 W
	Washing and heating	220 V	2000 W
		240 V	2400 W
	Drying	220 V	1600 W
		240 V	1600 W
	Spin	220 ~ 240 V	450 W
	Pumping		30 W
Spin revolutions			1400 rpm

NOTE

The design and specifications are subject to change without notice for quality improvement purposes.

WD90J7400GW_03478B-02_EN(EU).indd 59 2015/12/15 14:03:59

Specifications

According to Regulation (EU) No. 90/60/EC

" * " Asterisk(s) means variant model and can be varied (0-9) or (A-Z).

Samsung		
Model Name		WD90J7*****
Energy Efficiency Class		
A (highest efficient) to G (lowest efficient)		A
Energy Consumption		
Washing, spinning, and drying	kWh	6.12
Washing and spinning only	kWh	1.17
Washing Performance Class		
A (highest efficient) to G (lowest efficient)		A
Water Extraction Efficiency Class		
A (highest efficient) to G (lowest efficient)		A
Residual moisture	%	44
Maximum Spin Speed	rpm	1400
Capacity		
Washing	kg	9
Drying	kg	6
Water Consumption		
Washing, spinning, and drying	ℓ	99
Washing and spinning only	ℓ	54
Program Duration		
Washing, spinning, and drying	min	599
Washing and spinning only	min	263
Programs to which the information on the label and the Sheet relate	Wash	Cotton 60 ºC + Eco Wash + 1400rpm
	Dry	Cotton Dry + Cup board + Spin
Estimatd annual consumption for a 4-person household, always using the dries (200 cycles)		
Energy Consumption	kWh/yr	1224
Water Consumption	ℓ	19800
Estimatd annual consumption for a 4-person household, never using the drier (200 cycles)		
Energy Consumption	kWh/yr	234
Water Consumption	ℓ	10800

WD90J7400GW_03478B-02_EN(EU).indd 60 2015/12/15 14:03:59

The drying energy consumption data has been measured under the conditions specified inStandard EN50229.

- First drying should be performed with 3 kg load (the load consist: 1 sheets and 6 pillowcases and 7 towels) by selecting Cotton Dry (Cupboard) + Spin (1400);
- Second drying should be performed with 3 kg load (the load consist: 1 sheets and 6 pillowcases and 7 towels) by selecting Cotton Dry (Cupboard) + Spin (1400);
- Third drying should be performed with 3 kg load (the load consist: 1 sheets and 6 pillowcases and 7 towels) by selecting Cotton Dry (Cupboard) + Spin (1400);

(1 or 2 towels can be added or removed for setting weight.)

WD90J7400GW_03478B-02_EN(EU).indd 61 2015/12/15 14:03:59

Memo

SAMSUNG

QUESTIONS OR COMMENTS?

COUNTRY	CALL	OR VISIT US ONLINE AT
UK	0330 SAMSUNG (7267864)	www.samsung.com/uk/support

DC68-03478B-02