SIEMENS

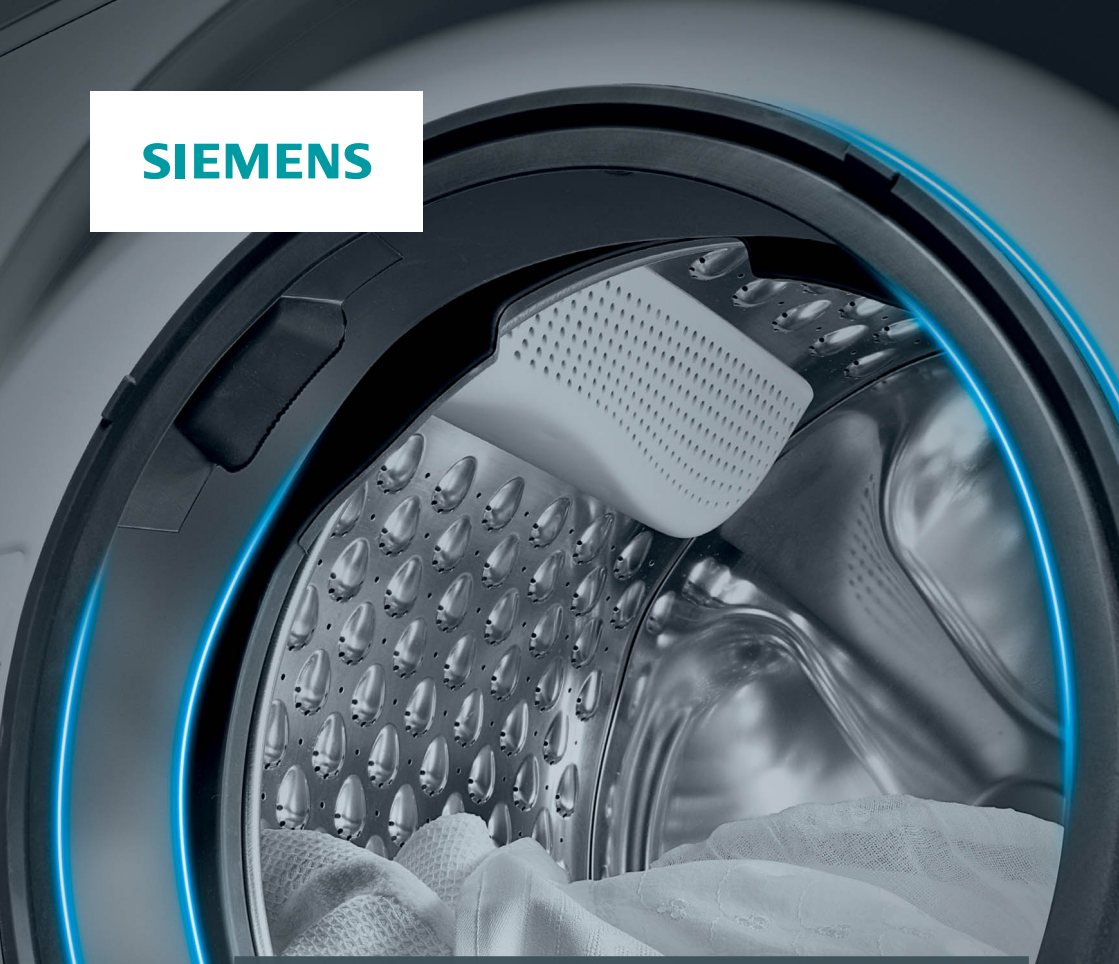

Washing machine

WM16XGH1GB

en User manual and installation instructions

Register your product on My Siemens and discover exclusive services and offers.
siemens-home.bsh-group.com/welcome

The future moving in.

Siemens Home Appliances

Table of contents

Safety 4
General information 4
Intended use..... 4
Restriction on user group..... 5
Safe installation..... 5
Safe use 7
Safe cleaning and maintenance 9

Preventing material damage..... 11

Environmental protection and saving energy 11
Disposing of packaging 11
Save energy and conserve resources 12
Energy saving mode 12

Installation and connection 12
Unpacking the appliance 12
Contents of package..... 13
Requirements for the installation location..... 13
Removing the transit bolts 14
Removing the transport struts 15
Connecting the appliance 16
Aligning the appliance 17

Familiarising yourself with your appliance 19
Appliance 19
Detergent drawer 20
Controls..... 20
Display 21
Programmes..... 24
Buttons..... 30
Operating logic 32

Accessories..... 34

Before using for the first time..... 34
Starting an empty washing cycle..... 34

Laundry 35
Preparing the laundry..... 35
Sorting laundry 36
Degrees of soiling..... 36
Care symbols on the care labels..... 36

Detergents and care products 36
Detergent recommendation..... 37
Detergent dosage 37

Basic operation 38
Switching on the appliance 38
Setting a programme 38
Adjusting the programme settings.... 39
Saving the programme settings 39
Loading laundry 39
Using a measuring aid for liquid detergent 40
Adding detergent and care product..... 41
Starting the programme 41
Adding laundry 41
Cancelling the programme..... 41
Resuming the programme when the programme status is Rinse Hold 42
Unloading the laundry..... 42
Switching off the appliance 42

Childproof lock 42
Activating the childproof lock 42
Deactivating the childproof lock 42

Home Connect 43
Connecting the appliance to a WLAN home network (Wi-Fi) with WPS function 43
Connecting the appliance to a WLAN home network (Wi-Fi) without WPS function 44
Connecting your appliance to the Home Connect app 45
Connecting the appliance to the energy manager 45
Activating Wi-Fi on the appliance 46

Deactivating Wi-Fi on the appliance 46
Software update..... 46
Resetting the appliance network settings..... 46
Remote diagnostics 46
Data protection 46
Declaration of Conformity..... 47

Basic settings 47
Overview of the basic settings..... 47
Changing the basic settings..... 48

Cleaning and servicing 48
Tips on appliance care 48
Cleaning the drum 49
Cleaning the detergent drawer 49
Descaling 50
Cleaning the drain pump..... 50
Cleaning the water outlet hose at the siphon..... 52
Cleaning the water inlet filter 53

Troubleshooting 54
Error code / Fault display / Signal ... 54
Malfunctions 55
Noise..... 58
Problem with results 58
Home Connect problem..... 59
Leakage 60
Odours 60
Emergency release 61

Transportation, storage and disposal 61
Removing the appliance 61
Inserting the transit bolts..... 61
Using the appliance again 62
Disposing of old appliance 62

Customer Service 63
Product number (E-Nr.) and production number (FD)..... 63
AQUA-STOP guarantee[1]..... 63

Consumption values..... 65

Technical specifications..... 65

[1] Depending on the appliance specifications

Safety

Please read the safety information to ensure that you use the appliance safely.

General information

You can find general information about this instruction manual here.

- Read this instruction manual carefully. Only this will ensure you use the appliance safely and efficiently.
- This manual is intended for the installer and the user of the appliance.
- Follow the safety instructions and warnings.
- Keep the instruction manual and the product information safe for future reference or for the next owner.
- Check the appliance after unpacking it. Do not connect the appliance if it has been damaged in transit.

Intended use

Read the information on intended use to ensure that you use the appliance correctly and safely.

Only use this appliance:

- According to this installation and instruction manual.
- For washing machine-washable fabrics and hand-washable wool in accordance with the care label.
- With tap water and commercially available detergents and care products suitable for washing machines.
- In private households and in enclosed spaces in a domestic environment.
- Up to an altitude of max. 4000 m above sea level.

Restriction on user group

Avoid risks to children and vulnerable persons.
This appliance may be used by children aged 8 or over and by people who have reduced physical, sensory or mental abilities or inadequate experience and/or knowledge, provided that they are supervised or have been instructed on how to use the appliance safely and have understood the resulting dangers.
Do not let children play with the appliance.
Cleaning and user maintenance must not be performed by children unless they are being supervised.
Keep children under the age of 3 years and pets away from the appliance.

Safe installation

Take note of the safety instructions when installing the appliance.

⚠ **WARNING – Risk of electric shock!**

- Improper installation is dangerous.
  - ▶ Connect and operate the appliance only in accordance with the specifications on the rating plate.
  - ▶ Connect the appliance to a power supply with alternating current only via a properly installed socket with earthing.
  - ▶ The protective conductor system of the domestic electrical installation must be properly installed. The installation must have a sufficiently large cross section.
  - ▶ When using a residual current circuit breaker, only use a type with the ⌔ mark.
  - ▶ Never equip the appliance with an external switching device, e.g. a timer or remote control.
  - ▶ When the appliance is installed, the mains plug of the power cord must be freely accessible. If free access is not possible, an all-pole isolating switch must be installed in the permanent electrical installation according to the installation regulations.
  - ▶ When installing the appliance, check that the power cable is not trapped or damaged.

- If the insulation of the power cord is damaged, this is dangerous.
  - ▶ Never let the power cord come into contact with hot appliance parts or heat sources.
  - ▶ Never let the power cord come into contact with sharp points or edges.
  - ▶ Never kink, crush or modify the power cord.

⚠ **WARNING – Risk of fire!**
It is dangerous to use an extended power cord and non-approved adapters.
- ▶ Do not use extension cables or multiple socket strips.
- ▶ If the power cord is too short, contact Customer Service.
- ▶ Only use adapters approved by the manufacturer.

⚠ **WARNING – Risk of injury!**
- The high weight of the appliance may result in injury when lifted.
  - ▶ Do not lift the appliance on your own.
- If this appliance is not correctly installed in a washer-dryer stack, the installed appliance may fall.
  - ▶ Only stack the dryer on a washing machine using the connection kit from the dryer manufacturer . No other installation method is permitted.
  - ▶ Do not install the appliance in a washer-dryer stack if the dryer manufacturer does not offer a suitable connection kit.
  - ▶ Do not install appliances from different manufacturers and with varying depths and widths in a washer-dryer stack.
  - ▶ Do not install a washer-dryer stack on a platform; the appliances may tip over.

⚠ **WARNING – Risk of suffocation!**
Children may put packaging material over their heads or wrap themselves up in it and suffocate.
- ▶ Keep packaging material away from children.
- ▶ Do not let children play with packaging material.

⚠ **CAUTION – Risk of injury!**

- The appliance may vibrate or move when in use.
  - ▶ Place the appliance on a clean, even, solid surface.
  - ▶ Align the appliance using the appliance feet and a spirit level.
- If hoses and power cords have been laid incorrectly, this causes a tripping hazard.
  - ▶ Lay hoses and power cords in such a way that there is no risk of tripping.
- If the appliance is moved by holding onto protruding components, such as the appliance door, the parts may break off.
  - ▶ Do not move the appliance by holding onto protruding parts.

⚠ **CAUTION – Risk of cutting!**

Touching sharp edges on the appliance may lead to cuts.

- ▶ Do not touch the sharp edges on the appliance.
- ▶ Wear protective gloves when installing and transporting the appliance.

Safe use

Follow these safety instructions when using the appliance.

⚠ **WARNING – Risk of electric shock!**

- If the appliance or the power cord is damaged, this is dangerous.
  - ▶ Never operate a damaged appliance.
  - ▶ Never pull on the power cord to unplug the appliance. Always unplug the appliance at the mains.
  - ▶ If the appliance or the power cord is damaged, immediately unplug the power cord or switch off the fuse in the fuse box and turn off the water tap.
  - ▶ Call Customer Service. → *Page 63*
  - ▶ Repairs to the appliance should only be carried out by trained specialist staff.
- An ingress of moisture can cause an electric shock.
  - ▶ Only use the appliance in enclosed spaces.

- Never expose the appliance to intense heat or humidity.
- Do not use steam- or high-pressure cleaners, hoses or sprays to clean the appliance.

⚠ **WARNING – Risk of harm to health!**
Children can lock themselves in the appliance, thereby putting their lives at risk.
- Do not install the appliance behind a door as this may obstruct the appliance door or prevent it from opening.
- With redundant appliances, unplug the power cord. Then cut through the cord and damage the lock on the appliance door beyond repair so that the appliance door will no longer close.

⚠ **WARNING – Risk of suffocation!**
Children may breathe in or swallow small parts, causing them to suffocate.
- Keep small parts away from children.
- Do not let children play with small parts.

⚠ **WARNING – Risk of poisoning!**
Detergents and care products may result in poisoning if consumed.
- If accidentally swallowed, seek medical advice.
- Keep detergents and care products out of the reach of children.

⚠ **WARNING – Risk of explosion!**
Laundry that has been pretreated with cleaning agents that contain solvents may cause an explosion in the appliance.
- Rinse pretreated laundry thoroughly with water before washing.

⚠ **CAUTION – Risk of injury!**
- The worktop may break if you stand on or climb onto the appliance.
  - Do not stand on or climb onto the appliance.

- The appliance may tip over if you sit on or lean against the open door.
  - ▶ Do not sit on or lean against the appliance door.
  - ▶ Do not place any objects on the appliance door.
- Reaching into the drum while it is still turning may cause hand injuries.
  - ▶ Wait for the drum to come to a complete stop before reaching inside.

⚠ **CAUTION – Risk of burns!**
When washing at high temperatures, the glass in the appliance door becomes hot.
- ▶ Do not touch the appliance door when it is hot.
- ▶ Keep children away from the appliance door when it is hot.

⚠ **CAUTION – Risk of scalding!**
When you wash at high temperatures, the detergent solution gets hot.
- ▶ Do not touch the hot detergent solution.

⚠ **CAUTION – Risk of chemical burns!**
If the detergent drawer is opened, detergent and care products may spray out from the appliance. Contact with eyes or skin may cause irritation.
- ▶ Rinse eyes and/or skin thoroughly with clean water if they come into contact with detergents or care products.
- ▶ If accidentally swallowed, seek medical advice.
- ▶ Keep detergents and care products out of the reach of children.

Safe cleaning and maintenance

Take note of the safety instructions when cleaning and performing maintenance work on the appliance.

⚠ **WARNING – Risk of electric shock!**
- Improper repairs are dangerous.
  - ▶ Repairs to the appliance should only be carried out by trained specialist staff.

- ▶ Only use genuine spare parts when repairing the appliance.
- ▶ If the power cord of this appliance is damaged, it must be replaced by the manufacturer, the manufacturer's Customer Service or a similarly qualified person in order to prevent any risk.

■ An ingress of moisture can cause an electric shock.

- ▶ Do not use steam- or high-pressure cleaners, hoses or sprays to clean the appliance.

⚠ **WARNING – Risk of injury!**

The use of non-original spare parts and non-original accessories is dangerous.

- ▶ Only use the manufacturer's original spare parts and original accessories.

⚠ **WARNING – Risk of poisoning!**

Poisonous fumes may be given off if you use cleaning agents that contain solvents.

- ▶ Do not use cleaning agents that contain solvents.

Preventing material damage

Follow these instructions to avoid material damage and damage to the appliance.

ATTENTION!

- The functionality of the appliance may be impaired if you use the wrong quantity of fabric softener, detergent, care product or cleaning agent.
  - ▶ Follow the dosage recommendations from the manufacturer.
- Exceeding the maximum load capacity impairs the function of the appliance.
  - ▶ Observe the maximum load capacity → *Page 24* for each programme and do not exceed it.
- The appliance is secured for transportation using transit bolts. Transit bolts which have not been removed may result in material damage and damage to the appliance.
  - ▶ Before starting up the appliance, remove the transit bolts completely and keep them in a safe place.
  - ▶ Before transport, fit the transit bolts fully in order to prevent damage in transit.
- If the water pressure is too high or too low, this may impair functioning of the appliance.
  - ▶ Make sure that the water pressure in the water supply system is min. 100 kPa (1 bar) and max. 1000 kPa (10 bar).
  - ▶ If the water pressure exceeds the maximum value specified, a pressure-reducing valve must be installed between the drinking water connection and the hose set of the appliance.
- Modified or damaged water hoses may result in material damage and damage to the appliance.
  - ▶ Never kink, crush, modify or cut through water hoses.
  - ▶ Only use the water hoses supplied with the appliance or genuine spare hoses.
  - ▶ Never re-use water hoses that have been used before.
- Unsuitable cleaning products may damage the surfaces of the appliance.
  - ▶ Do not use harsh or abrasive detergents.
  - ▶ Do not use cleaning products with a high alcohol content.
  - ▶ Do not use hard scouring pads or cleaning sponges.
  - ▶ Clean the appliance with nothing but water and a soft, damp cloth.
  - ▶ Remove all detergent residue, spray residue or other residues immediately if they come into contact with the appliance.

Environmental protection and saving energy

Help protect the environment by using your appliance in a way that conserves resources and by disposing of reusable materials properly.

Disposing of packaging

The packaging materials are environmentally compatible and can be recycled.

- ▶ Sort the individual components by type and dispose of them separately.

  Information about current disposal methods are available from your specialist dealer or local authority.

Save energy and conserve resources

If you follow these instructions, your appliance will use less electricity and less water.

Do not exceed the programme's maximum load capacity → *Page 24*.

+ A higher load capacity extends the programme duration and increases energy consumption.

Use the programme's maximum load capacity → *Page 24*.

+ The energy and resource consumption is the most efficient.

Use the economy programme settings.

+ If you adjust the programme settings for a programme, the display shows the expected consumption.

Add → *Page 37* detergent based on the laundry's degree of soiling.

+ For light to normal soiling, a smaller amount of detergent is sufficient. Observe the dosage recommendation from the detergent manufacturer.

Reduce the washing temperature for lightly and normally soiled laundry.

+ At low temperatures, the appliance consumes less energy. For light to normal soiling, lower temperatures than indicated on the care label are also sufficient.

Set the maximum spin speed if you want to dry the laundry in a tumble dryer afterwards.

+ The drier the laundry, the shorter the programme duration when drying which, in turn, reduces energy consumption.

Wash the laundry without prewash.

+ Washing with prewash increases the programme duration and increases energy and water consumption.

The appliance has a continuous automatic load adjustment function.

+ Depending on the type of fabric and load capacity, the continuous automatic load adjustment function optimally adjusts the water consumption and programme duration.

Energy saving mode

If you do not use the appliance for an extended period, it automatically switches to energy-saving mode. All displays go out and **Start** / **Reload** flashes.
Energy-saving mode ends when you use the appliance again, e.g. if you open or close the door.
If you do not use the appliance for an extended period, the appliance switches off automatically.

Installation and connection

You can find out where and how best to install your appliance here. You will also learn how to connect the appliance to the water and power supply.

Unpacking the appliance

1. Remove any packaging and protective covers completely from the appliance.
2. Check the appliance for visible damage.

3. **ATTENTION!** Objects remaining in the drum that are not designed for operation with the appliance may cause material damage and damage to the appliance.

   ▸ Remove these objects, along with all supplied accessories, from the drum before starting the appliance.

   Open the door and remove the accessory from the drum.

Contents of package

After unpacking all parts, check for any damage in transit and completeness of the delivery.

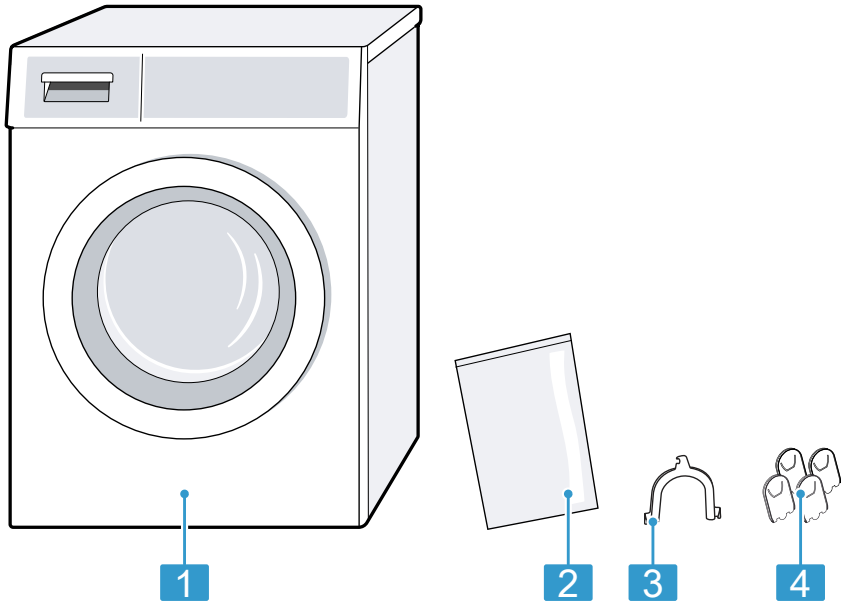

1	Washing machine
2	Accompanying documents
3	Elbow for fixing the water outlet hose
4	Cover caps

Requirements for the installation location

The appliance may "wander" when it spins. Observe the instructions for the installation location.

Note: Please read the safety information → *Page 4* to ensure that you use the appliance safely.

⚠ **WARNING**
Risk of electric shock!
The appliance contains live parts. Touching live parts is dangerous.
- ▸ Do not operate the appliance without a cover cap.

⚠ **WARNING**
Risk of injury!
When using the appliance on a base, the appliance may tip over.
- ▸ Always secure the feet of the appliance to a base using the manufacturer's fixing brackets → *Page 34* before using the appliance for the first time.

ATTENTION!
- If the appliance is installed in areas exposed to frost or outdoors, frozen residual water may damage the appliance and frozen hoses may crack or split.
  - ▸ Do not install or operate this appliance anywhere that is liable to experience frost and/or outdoors.
- The appliance underwent a function test before leaving the factory and may, therefore, contain residual water. This residual water may leak out if the appliance is tilted at an angle greater than 40°.
  - ▸ Tilt the appliance carefully.

Installation location	Requirements
On a base 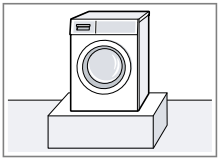	Secure the appliance with fixing brackets → *Page 34*.
On a wooden joist floor 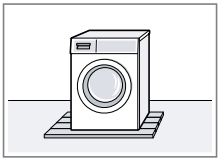	Place the appliance on a water-resistant wooden board which is screwed tightly to the floor. The wooden board should be at least 30 mm thick.
In a kitchen unit 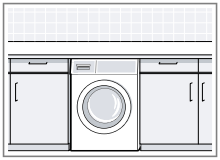	■ A niche width of 60 cm is required. ■ Only install the appliance underneath a continuous worktop that is securely connected to adjacent cabinets.
On a wall 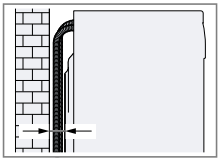	Do not trap the hoses between the wall and the appliance.

Removing the transit bolts

The appliance is secured for transportation using transit bolts on the rear of the appliance.

Notes
- Please read the safety information → *Page 4* to ensure that you use the appliance safely.
- Keep the transit bolts, screws and sleeves in a safe place for future transport → *Page 61*.

1. Pull the hoses out of the holders.

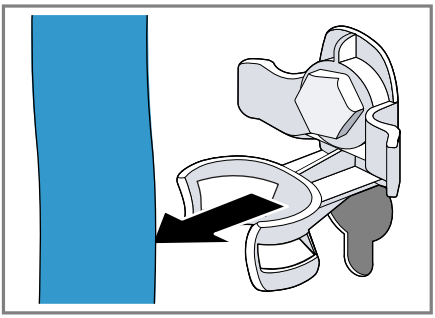

2. Unscrew ① and remove ② all four screws for the transit bolts with a WAF 13 wrench.

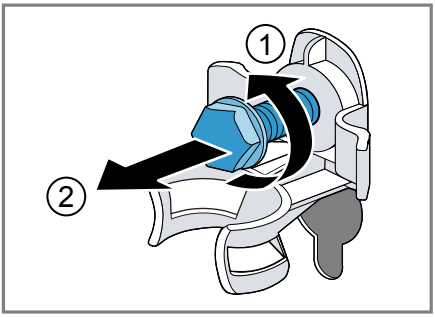

3. Pull the power cord out of the holder.

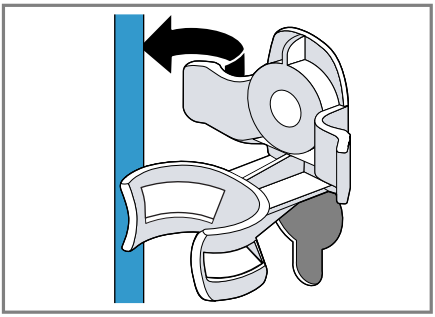

4. Remove the four sleeves.

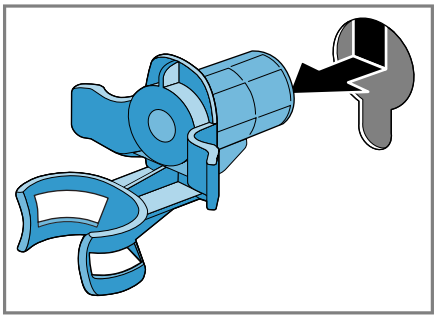

5. Put on the four cover caps.

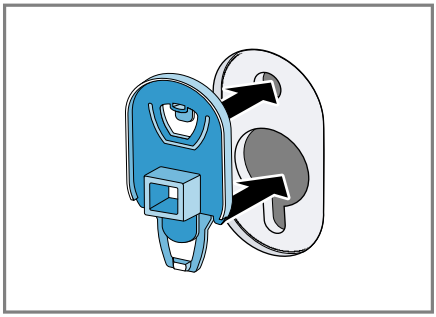

6. Press down on the four cover caps.

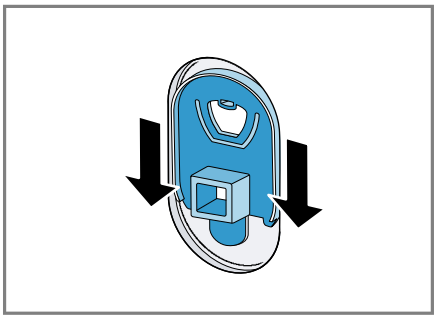

Removing the transport struts

Note: Please read the safety information → *Page 4* to ensure that you use the appliance safely.

1. Unscrew and remove the screws in the vertical transport struts using a T20 screwdriver.

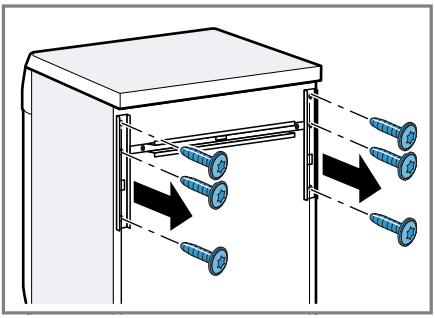

2. Remove the transport struts.

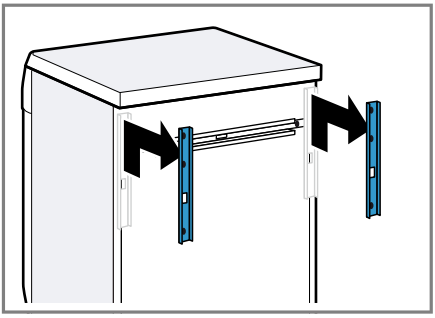

3. Undo and remove the screws in the horizontal transport strut using a T20 screwdriver.

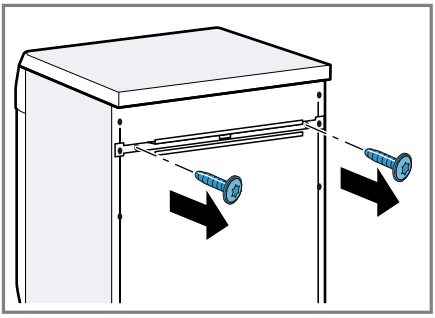

4. Remove the transport strut.

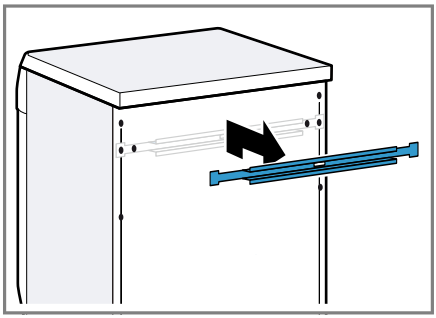

Connecting the appliance

Connect your appliance to the power supply, water inlet and water outlet.

Connecting the water inlet hose

Note: Please read the safety information → *Page 4* to ensure that you use the appliance safely.

⚠ **WARNING**
Risk of electric shock!
The appliance contains live parts. Touching live parts is dangerous.
- Do not immerse the electrical AquaStop valve in water.

1. Connect the water inlet hose to a tap (26.4 mm = 3/4").

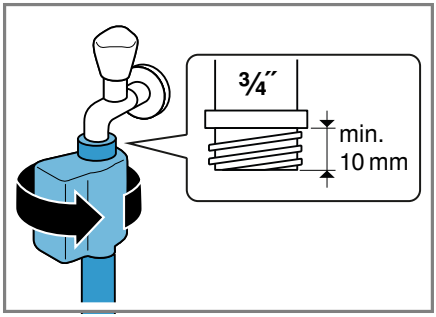

2. Open the water tap carefully and check that the connection points are tight.

Water outlet connection types

This information is intended to help you to connect this appliance to the water outlet.

Note: Please read the safety information → *Page 4* to ensure that you use the appliance safely.

ATTENTION!
When draining, the water outlet hose is subject to water pressure and may come loose from the installed connection point.

- Secure the water outlet hose against unintentional loosening.

Drainage into a siphon. Secure the connection point with a (24–40 mm) hose clamp.	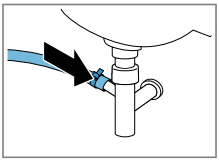
Drainage into a wash basin. Fix and secure the water outlet hose with an elbow.	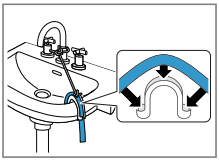
Drainage into a plastic pipe with rubber sleeve or into a gully. Fix and secure the water outlet hose with an elbow.	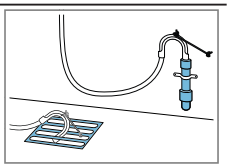

Connecting the appliance to the electricity supply

Note: Please read the safety information → *Page 4* to ensure that you use the appliance safely.

1. Insert the mains plug of the appliance's power cable in a socket nearby.

   The connection details of the appliance can be found under Technical data → *Page 65*.

2. Check the mains plug is inserted properly.

Aligning the appliance

In order to reduce noise and vibration and to prevent the appliance from moving, align the appliance correctly.

Note: Please read the safety information → *Page 4* to ensure that you use the appliance safely.

1. Loosen the lock nuts using a WAF 17 wrench by turning it in a clockwise direction.

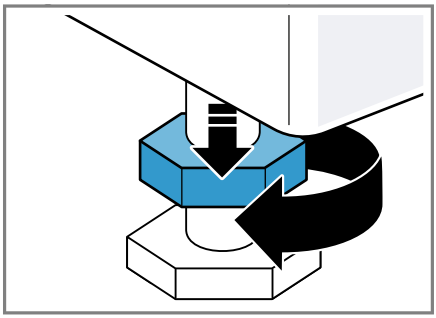

2. To align the appliance, turn the appliance feet. Check that the appliance is level using a spirit level.

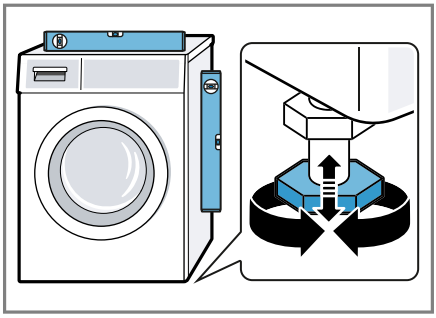

   All appliance feet must stand firmly on the ground.

3. Screw the lock nuts tightly against the housing using a WAF 17 wrench.

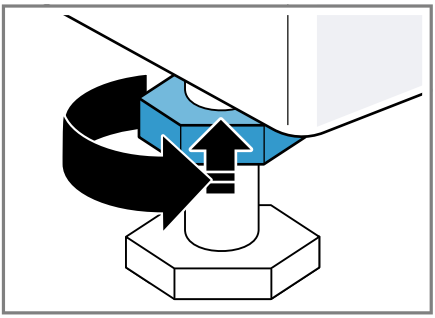

In doing so, hold the foot tight and do not adjust its height.

Familiarising yourself with your appliance

Familiarise yourself with the parts of your appliance.

Appliance

You can find an overview of the parts of your appliance here.

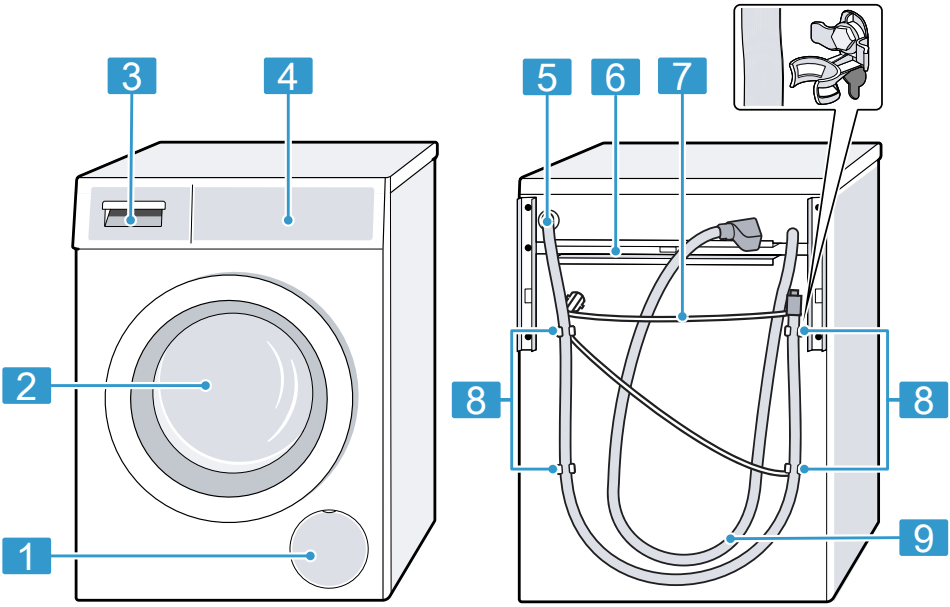

On certain models, specific details such as the colour and shape may differ from those pictured.

1	Maintenance flap for the drain pump → *Page 50*
2	Door
3	Detergent drawer → *Page 20*
4	Controls → *Page 20*
5	Water outlet hose → *Page 17*
6	Transport struts → *Page 15*

7	Power cord → *Page 17*
8	Transit bolts → *Page 14*
9	Water inlet hose → *Page 16*

Detergent drawer

Below is an overview of the structure of the detergent drawer.

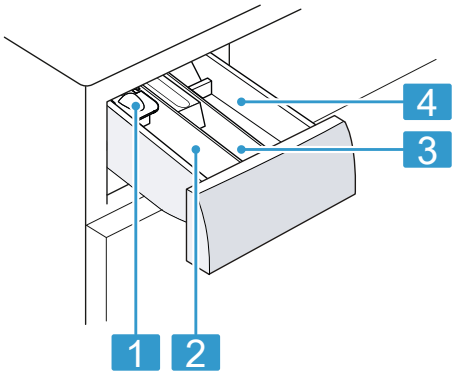

1	Measuring aid for liquid detergent → *"Using a measuring aid for liquid detergent", Page 40*
2	Compartment II: ■ Detergent for main wash ■ Water softener ■ Bleach ■ Stain remover
3	Compartment ❀: ■ Fabric softener ■ Liquid starch ■ Waterproofing agent
4	Compartment I: ■ Detergent for prewash ■ Hygiene detergent

Controls

The controls are used to configure all functions of your appliance and to obtain information about the operating status.

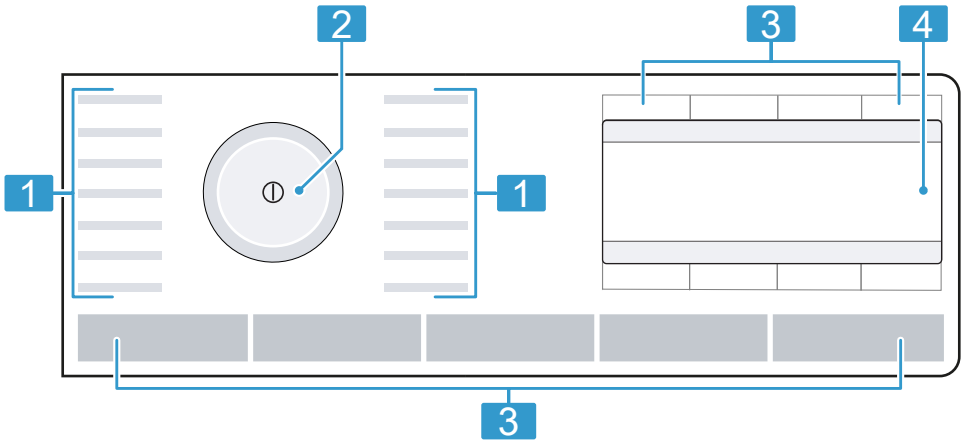

1	Programmes → *Page 24*	3	Buttons → *Page 30*
2	Programme selector → *Page 38*	4	Display → *Page 21*

Display

The display shows the current settings, options or relevant information.

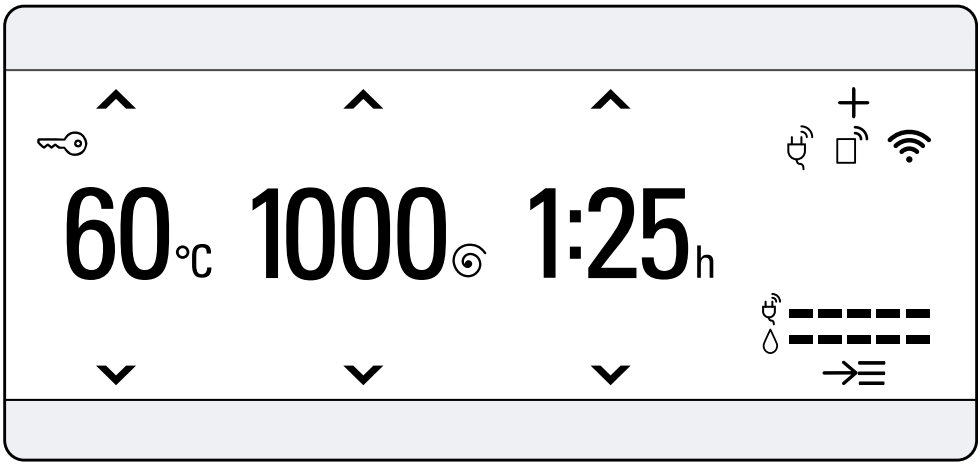

Example: Symbol display

Display	Designation	Description
0:40 h [1]	Programme duration/ programme time remaining	Expected programme duration or programme time remaining.
10 [1]	"Ready in" time	The programme end has been set and the remaining number of hours is displayed. → *"Buttons", Page 30*
10 kg [1]	Recommended load	The maximum load capacity for the selected programme in kg.
0 - 1600	Spin speed	Set spin speed in rpm. → *"Buttons", Page 30* 0= No spin cycle, draining only
– 90 °C	Temperature	Set temperature in °C. → *"Buttons", Page 30* (cold)
	Navigation	Selecting settings. → *"Operating logic", Page 32*
+	Other programme settings	Activate, deactivate or adjust other programme settings. → *"Buttons", Page 31*
	Saving the programme Other programmes	Save a programme → *Page 39*. Set other programmes → *Page 38*.

[1] Example

Display	Designation	Description
	Childproof lock	■ Lights up: The childproof lock is activated. ■ Flashes: The childproof lock is active and the programme selector has been adjusted. → *"Deactivating the childproof lock", Page 42*
	Less Ironing	The reduced creasing function is activated. → *"Buttons", Page 32*
+ +1 +2 +3	Extra Rinse	Additional rinse cycles are activated. → *"Buttons", Page 31*
	Water Plus	Wash with more water is activated. → *"Buttons", Page 32*
	Soaking	Soaking is activated. → *"Buttons", Page 32*
	Rinse Hold	Rinse Hold is activated. → *"Buttons", Page 31*
	Silent Wash	Silent Wash is activated. → *"Buttons", Page 31*
	Baby food	The stain type is activated.
	Blood	The stain type is activated.
	Egg	The stain type is activated.
	Strawberry	The stain type is activated.
	Soil and sand	The stain type is activated.
	Grass	The stain type is activated.
	Coffee	The stain type is activated.
	Cosmetics	The stain type is activated.
	Orange	The stain type is activated.
	Red Wine	The stain type is activated.
	Chocolate	The stain type is activated.
	Sweat	The stain type is activated.
	Dirty socks	The stain type is activated.
	Grease and oil	The stain type is activated.
	Tea	The stain type is activated.
	Tomato	The stain type is activated.
	Energy consumption	Energy consumption for the selected programme. ■ — : Low energy consumption ■ ————— : High energy consumption

[1] Example

Display	Designation	Description
	Water consumption	Water consumption for the selected programme. ■ — : Low water consumption ■ ————— : High water consumption
	Remote start	Remote start is activated. → *"Buttons", Page 31*
	Wi-Fi	■ Lights up: The appliance is connected to your home network. ■ Flashes: The appliance is trying to connect to your home network. → *"Home Connect ", Page 43*
	Wi-Fi	The appliance is not connected to your home network. → *"Home Connect ", Page 43*
	Energy manager	The appliance is connected to the smart energy system (energy manager). → *"Connecting the appliance to the energy manager", Page 45*
Dosage: 50% [1]	Dosing recommendation	The recommended dosage for detergent. → *"Detergent dosage", Page 37* **Note:** The dosing recommendation indicates the load capacity that should be used for the relevant detergent dosage. The percentage refers to the maximum load capacity for the programme.

[1] Example

Programmes

Below is an overview of the programmes. You can find information on the load and on the setting options. The laundry's care labels provide you with additional information on programme selection.

Programme	Description	Max. load (kg)	Max. temperature (°C)	Max. spin speed (rpm)	varioSpeed	stainRemoval System	Rinse Plus	Rinse Hold	Prewash	Silent Wash	Soak	Water Plus	Less Ironing
Cottons	Wash hard-wearing items made from cotton, linen or blended fabrics. Also suitable as a short programme for normally soiled laundry when you activate varioSpeed. If varioSpeed is activated, the maximum load capacity is reduced to 5 kg.	10	90	1600	●	●	●	●	●	●	●	●	●
Cottons Eco	Wash hard-wearing items made from cotton, linen or blended fabrics. Energy-saving programme. **Note:** To save energy, the actual washing temperature may deviate from the set washing temperature. The washing performance meets legal requirements.	10	90	1600	–	●	●	●	●	●	●	●	●
Easy Care	Wash items made from synthetic or blended fabrics.	4	60	1200	●	●	●	●	●	●	●	●	●

Programme	Description	Max. load (kg)	Max. temperature (°C)	Max. spin speed (rpm)	varioSpeed	stainRemoval System	Rinse Plus	Rinse Hold	Prewash	Silent Wash	Soak	Water Plus	Less Ironing
Mixed Fabrics	Wash items made from cotton, linen, or synthetic or blended fabrics. Suitable for lightly soiled laundry.	4	60	1600	●	●	●	●	●	●	●	●	●
Delicate / Silk	Wash delicate, washable items made from silk, viscose and synthetics. Use a detergent that is suitable for delicates or silk. **Note:** Wash especially delicate items or items with hooks, eyelets or clips in a mesh laundry bag.	2	40	800	–	●	●	●	●	●	●	●	●
Wool	Hand- or machine-washable items that are made from wool or contain wool. To prevent the laundry from shrinking, the drum moves the items very gently with long pauses. Use a detergent that is suitable for wool.	2	40	800	–	–	–	●	–	●	–	–	–
Others	Set additional programmes. The additional programmes can be found in this programme overview. The selectable programme settings depend on the selected programme.	–	–	–	–	–	–	–	–	–	–	–	–

Programme	Description	Max. load (kg)	Max. temperature (°C)	Max. spin speed (rpm)	varioSpeed = ⏲	stainRemoval System	Rinse Plus	Rinse Hold	Prewash	Silent Wash	Soak	Water Plus	Less Ironing
Drain	Drains the water, e.g. when a programme is cancelled. Do not use fabric softener.	–	–	1600	–	–	–	–	–	–	–	–	–
Rinse	Rinses and then spins the laundry, and then drains the water.	–	–	1600	–	–	●	●	–	–	–	●	●
Spin	Spins and drains the water. Do not use fabric softener.	–	–	1600	–	–	–	–	–	–	–	–	●
Easy Care Plus	Wash dark-coloured and colour-intense items made from cotton or easy-care fabric, e.g. jeans. Turn laundry inside-out before washing. Use liquid detergent.	4	40	1200	●	●	●	●	●	●	●	●	●
Duvet	Wash pillows or quilts stuffed with synthetic fibres or down fillings. Wash large items separately. Use a detergent that is suitable for down or delicates. Use sparingly. Do not use fabric softener. **Note:** To prevent excessive foaming, remove air from laundry items by rolling them up before you wash them.	2,5	60	1200	–	–	●	●	–	–	–	●	–

Programme	Description	Max. load (kg)	Max. temperature (°C)	Max. spin speed (rpm)	varioSpeed	stainRemoval System	Rinse Plus	Rinse Hold	Prewash	Silent Wash	Soak	Water Plus	Less Ironing
Drum clean	Cleaning and caring for the drum. Use this programme in the following cases: ■ Before using the appliance for the first time ■ If you regularly wash at temperatures of 40 °C or lower ■ After a prolonged period of non-use Use washing powder or a detergent containing bleach. Halve the amount of detergent to avoid foaming. Do not use fabric softener. Do not use liquid detergent or detergent that is intended for woollens or delicates. **Note:** The drum cleaning indicator will flash to remind you if you have not used a programme at 60 °C or higher for a long time.	–	–	1200	–	–	–	–	–	●	–	–	–
Memory	Save the programme you require and the customised programme settings. The selectable programme settings depend on the selected programme.	–	–	–	–	–	–	–	–	–	–	–	–

Programme	Description	Max. load (kg)	Max. temperature (°C)	Max. spin speed (rpm)	varioSpeed =	stainRemoval System	Rinse Plus	Rinse Hold	Prewash	Silent Wash	Soak	Water Plus	Less Ironing
Outdoor	Wash all-weather and outdoor clothing with membrane technology and water-resistant equipment. Use a detergent for outdoor fabrics. Do not use fabric softener.	2	40	800	–	–	–	–	–	–	–	–	–
powerSpeed 59`	Wash items made from cotton, linen, or synthetic or blended fabrics. Suitable for lightly and normally soiled laundry. Optimum washing results in under an hour.	5	40	1400	–	●	●	●	●	●	●	●	●
Hygiene	Wash hard-wearing items made from cotton, linen or blended fabrics. Suitable for allergy sufferers and for strict hygiene requirements. **Note:** Once the set temperature has been reached, it remains constant throughout the washing process.	6,5	60	1600	●	●	●	●	●	●	●	●	●
Towels	Hard-wearing items made from cotton or blended fabrics, e.g. towels and dressing gowns.	4	90	1600	●	●	●	●	●	●	●	●	●

Programme	Description	Max. load (kg)	Max. temperature (°C)	Max. spin speed (rpm)	varioSpeed	stainRemoval System	Rinse Plus	Rinse Hold	Prewash	Silent Wash	Soak	Water Plus	Less Ironing
Shirts	Wash non-iron shirts and blouses made from cotton, linen, synthetic fibres or blended fabrics. **Tip:** In order to avoid creasing in your laundry, you can activate Less Ironing. The laundry is only given a short spin and can be removed while still dripping wet. Hang out shirts and blouses while they are still dripping wet so that they drip dry. Use the Delicate / Silk programme to wash shirts and blouses made from silk or delicate fabrics.	2	60	800	–	●	●	●	●	●	●	●	●
Rapid 15' / 30'	Wash items made from cotton, synthetic or blended fabrics. Short programme for small items of lightly soiled laundry The programme duration is approx. 30 minutes. If you wish to reduce the programme duration to 15 minutes, activate varioSpeed. The maximum load is reduced to 2 kg.	4	40	1200	●	–	●	●	–	●	–	–	–

Buttons

Below is an overview of the buttons and their setting options.
With the **Options** button, you can open the sub-menu for additional programme settings. The additional programme settings are listed in the overview for the buttons.

The selection of programme settings depends on the selected programme. You can see the selection options for each programme in the overview for → *"Programmes", Page 24*.

Button	Selection	Description
Start / Reload	■ Start ■ Cancel ■ Pause	Start, cancel or pause the programme.
varioSpeed	■ Activate ■ Deactivate	Activate or deactivate a short washing programme. **Note:** Energy consumption increases. The washing result is not affected by this.
stainRemoval System	Multiple selection	Select the type of stain. The temperature, drum movement and soaking time are all adjusted to suit the type of stain.
Ready In	1–24 hours	Set the programme end. The programme duration is already included in the set number of hours. Once the programme has started, the programme duration is displayed.
Temperature	– 90 °C	Adjust the temperature in °C.
Spin Speed	0 – 1600 rpm	Adjust the spin speed or deactivate the spin cycle. If 0 is selected, the water is drained and the spin cycle is deactivated at the end of the washing cycle. The laundry stays wet inside the drum.
(mains switch)	■ Switch on ■ Switch off	Switch the appliance on or off.

Button	Selection	Description
Remote Start	■ Activate ■ Deactivate ■ Open the Home Connect menu	If you briefly press the button, the appliance will be enabled for remote start via the Home Connect app If you press the button for approx. 3 seconds, the Home Connect menu opens. **Notes** ■ For safety reasons, remote start cannot be activated if the door is open. ■ Remote start is deactivated for safety reasons in the following circumstances: – Open the door. – Press Start / Reload . – Press Remote Start . – Switch off the appliance. – Following a power cut.
Child Lock 3 sec.	■ Activate ■ Deactivate	Activate or deactivate the childproof lock. Disable the control panel to prevent unwanted or accidental operation. If the childproof lock is activated and the appliance has been switched off, the childproof lock remains activated. → *"Childproof lock", Page 42*
Basic Settings 3 Sec.	Basic settings → *Page 47*	Change the basic settings for the appliance. → *"Changing the basic settings", Page 48*
Options	Multiple selection	Activate additional programme settings. → *"Adjusting additional programme settings", Page 39* The additional programme settings can be found in this overview.
Prewash	■ Activate ■ Deactivate	Activate or deactivate prewash, e.g. for washing heavily soiled laundry.
Rinse Plus	■ Activate ■ Deactivate	Activate or deactivate up to three additional rinse cycles. Recommended for particularly sensitive skin or in regions with very soft water.
Rinse Hold	■ Activate ■ Deactivate	Activate or deactivate spinning and draining at the end of the washing cycle. The laundry remains in the water after the last rinse cycle. → *"Resuming the programme when the programme status is Rinse Hold", Page 42*
Silent Wash	■ Activate ■ Deactivate	Activate or deactivate Silent Wash, e.g. for washing during the night. The audible signal at the end of programme is deactivated and the final spin speed is reduced.

Button	Selection	Description
Water Plus	■ Activate ■ Deactivate	Wash with more water. Recommended for particularly sensitive skin and for treating laundry more gently.
Soak	■ Activate ■ Deactivate	Activate or deactivate soaking. Before the main wash cycle starts, the laundry remains in the water for longer. For laundry with particularly stubborn soiling.
Less Ironing	■ Activate ■ Deactivate	Activate or deactivate the reduced creasing programme. In order to reduce creasing in the laundry, the spin cycle and the spin speed are adapted. The laundry is damp enough after washing that it needs to be hung out on a washing line.

Operating logic

In addition to the actual functions of the buttons on the display, you can also use these buttons to select programme settings in the main menu and settings in the sub-menus. The buttons are then marked by symbols in the display.

Main menu
To select programme settings, press the buttons above or below the symbols.

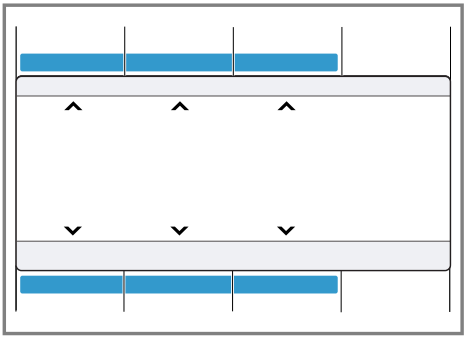

The selected programme setting is shown in the middle of the display.

Sub-menu
To select the settings you require, press the buttons below the symbols until the required setting is selected in the display.

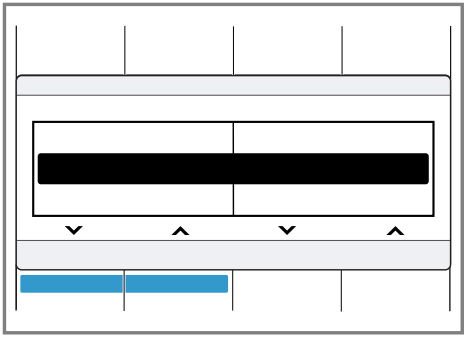

To select the settings you require, press the buttons below the symbols until the required setting is selected in the display.

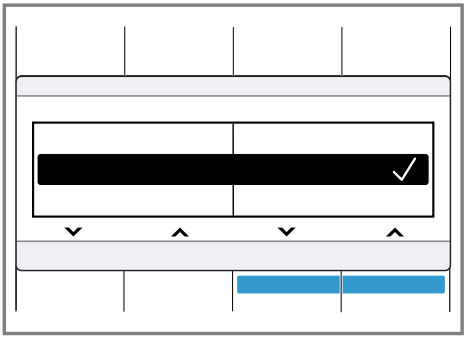

If a setting is activated, the display shows ✓. The selection does not need to be confirmed again.
The sub-menu closes automatically after a few seconds.

Accessories

Only use original accessories. These have been made especially for your appliance. Here you can find an overview of your appliance's accessories and how to use them.

	Use	Order number
Water inlet hose extension	Extend the water inlet hose for cold water or AquaStop (approx. 2.50 m).	WZ10130
Fixing brackets	Improves the stability of the appliance.	WX975600
Liquid detergent insert	Measure liquid detergent.	00605740

Before using for the first time

Prepare the appliance for use.

Starting an empty washing cycle

Your appliance was inspected thoroughly before leaving the factory. To remove any residual water, run the first wash cycle without any laundry.

Note: Please read the safety information → *Page 4* to ensure that you use the appliance safely.

1. Press ⏻.

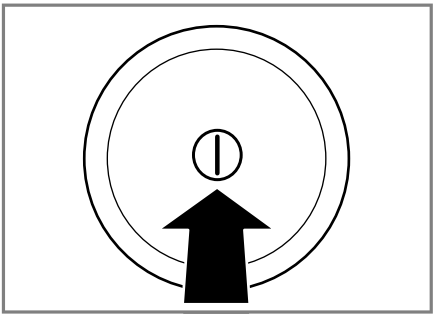

It may take a few seconds for the appliance to switch on.

2. Set the **Drum clean** programme.
3. Close the door.
4. Pull out the detergent drawer.

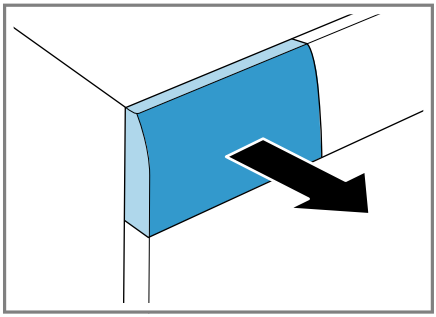

5. Pour approx. 1 litre of tap water into compartment II.

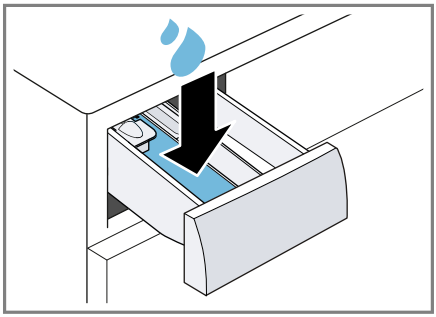

6. Pour washing powder into compartment II.

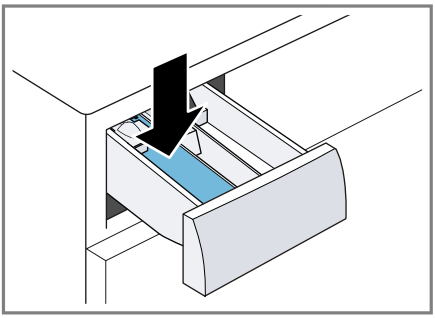

To prevent foaming, use only half of the amount of detergent recommended by the detergent manufacturer for light soiling. Do not use detergent suitable for woollens or delicates.

7. Push in the detergent drawer.

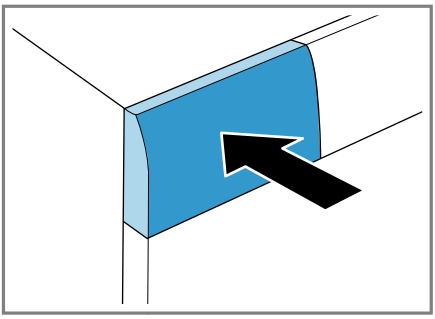

8. Press **Start** / **Reload** to start the programme.
✔ The display shows the remaining programme duration.
9. Start the first wash cycle or press ⏻ to switch off the appliance.
→ *"Basic operation", Page 38*

Laundry

You can wash all items that the manufacturer has marked as machine-washable on the care label and fabrics made from hand-washable wool using your appliance.

Preparing the laundry

ATTENTION!
Objects remaining in the laundry may damage the laundry and the drum.

- Remove all items from any pockets in your laundry before using the appliance.

- To protect your appliance and the laundry, prepare the laundry beforehand.
  - Empty all pockets
  - Brush sand out of all collars and pockets
  - Close bed covers and cushion covers
  - Close all zips, Velcro fasteners, hooks and eyes
  - Tie cloth belts and apron strings together or use a mesh laundry bag
  - Remove curtain hooks and lead strips or use a mesh laundry bag
  - Use a mesh laundry bag for small items of laundry such as children's socks
  - Separate items of laundry and shake them out
  - Wash large and small items of laundry together
  - Dab fresh stains with soapy water (do not rub them)
  - Some stubborn or dried-in stains can be removed by washing several times

Sorting laundry

Note: Please read the safety information → *Page 4* to ensure that you use the appliance safely.

- ▸ To improve washing results and prevent discolouration, sort the laundry before washing according to the following criteria.
  - Type of fabric and fibre type
  - Whites
  - Colours
    Wash new coloured items separately the first time you wash them.
  - Soiling → *Page 36*
  - Manufacturer's specifications on the care labels → *Page 36*

Degrees of soiling

Degree of soiling	Soiling	Examples
Light	■ No dirt or stains are visible ■ Laundry has absorbed odours	Light summer clothing or sports clothing that has been worn for a just a few hours
Normal	Dirt or light stains are visible	■ T-shirts, shirts or blouses are sweat-soaked or have been worn a few times ■ Towels or bedding that has been used for up to one week
Heavy	Dirt or stains are clearly visible	Tea towels, baby items or work clothing

Care symbols on the care labels

The symbols indicate the recommended programme and the numbers in the symbols indicate the maximum recommended washing temperature.

Symbol	Washing process	Recommended programme
95 60 40 30	Normal	Cottons
60 40 30	Gentle	Easy Care
40 30	Particularly gentle	Delicates/Silk for washing by hand
	Hand wash	Wool
	Not suitable for machine-washing	–

Tip: You can find more information about care symbols at www.ginetex.ch.

Detergents and care products

You can protect your appliance and your laundry by selecting and using the correct detergents and care products.

You can use all detergents and care products which are suitable for domestic washing machines.

Note: Please read the safety information → *Page 4* to ensure that you use the appliance safely.

The manufacturer's instructions for use and dosage can be found on the packaging.

Notes

- Only use liquid detergents that are self-flowing
- Do not mix different liquid detergents
- Do not mix detergent and fabric softener
- Do not use products which have developed a top layer or are highly congealed
- Do not use products containing solvents, caustic agents or volatile substances (e.g. bleach)
- Use dyes sparingly as salt may damage stainless steel
- Do not use bleaching agents in the appliance

Detergent recommendation

This information is intended to help you to choose the right detergent for your items.

Fabrics	Detergent	Programme	Temperature
Heat-resistant white fabrics made from cotton or linen	Standard detergent with optical brighteners	Cottons	From cold up to 90 °C
Coloured fabrics made from linen or cotton	Detergent for colours without bleach or optical brighteners	Cottons	From cold up to 60 °C
Coloured fabrics made from easy-care fibres or synthetic materials	Detergent for colours/delicates without optical brighteners	Easy Care	From cold up to 60 °C
Delicate fabrics made from silk or viscose	Delicates	Delicates/Silk	From cold up to 40 °C
Wool	Detergent for woollens	Wool	From cold up to 40 °C

Tip: Visit www.cleanright.eu to find further information on detergents, care products and cleaning agents for domestic use.

Detergent dosage

Use the correct detergent dosage to achieve optimal washing results and save resources.
The detergent dosage depends on:

- The amount of laundry
- Degree of soiling
- Water hardness
  You can find out how hard your water is from your local water company or measure it yourself using a water hardness tester.

Water hardness

Hardness range	Total hardness in mmol/l	German degrees in °dH
soft (I)	0–1.5	0–8.4
medium (II)	1.5– 2.5	8.4–14
hard (III)	over 2.5	over 14

Example of a manufacturer's instructions for detergent
These example values refer to a standard load of 4–5 kg.

Soiling	Light	Normal	Heavy
Water hardness: Soft/medium	40 ml	55 ml	80 ml
Water hardness: Hard/very hard	55 ml	80 ml	105 ml

The dosages can be found on the manufacturer's packaging.
- Adjust the dosage to the actual load.

Basic operation

You can find out everything you need to know about operating your appliance here.

Switching on the appliance

▸ Press ⏻.

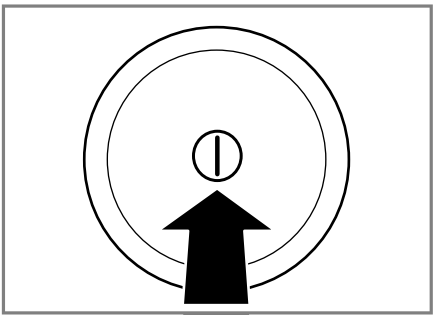

It may take a few seconds for the appliance to switch on.

Setting a programme

1. Set the programme selector to the required programme → *Page 24*.

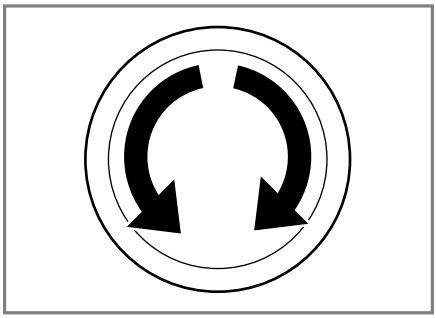

2. If necessary, adjust the programme settings → *Page 39*.

Setting additional programmes

1. Set the **Others** programme.
2. Press →☰ to call up the sub-menu for additional programmes.

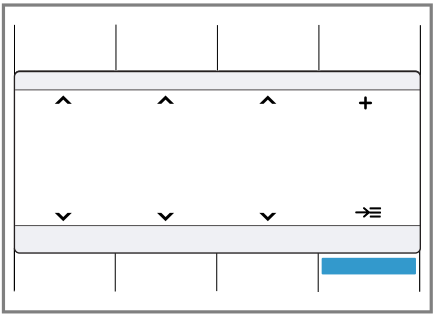

3. Select a programme.
4. Press **Main menue** to call up the main menu.
5. Adjust the programme settings if required.
6. Start the programme.

Adjusting the programme settings

Depending on the programme and programme progress, you can adjust or activate/deactivate the settings.

Note: Overview of all programme settings:
→ *"Buttons", Page 30*

Requirement: A programme has been set.

- Adjust the programme settings.
  → *"Operating logic", Page 32*

Note

- The programme settings are not saved permanently for the programme.

Adjusting additional programme settings

1. Press **Options** to call up the sub-menu for the additional programme settings.
2. Select the programme settings.

   The programme settings are not saved permanently for the programme.
3. Press **Options** to call up the main menu.

Saving the programme settings

1. Set the **Memory** programme.
2. Press →☰ to call up the sub-menu for the memory programmes.

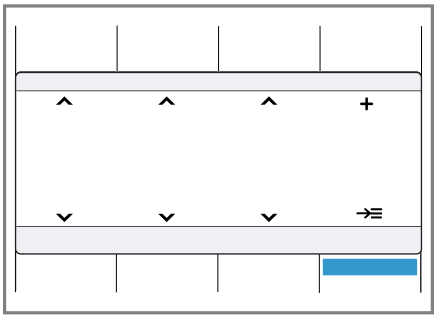

3. Select a programme.
4. Press **Main menue** to call up the main menu.
5. Adjust the programme settings if required.

✔ The programme is saved.

Loading laundry

Notes

- Please read the safety information → *Page 4* to ensure that you use the appliance safely.
- To prevent creasing, take note of the maximum load for the relevant programme → *Page 24*.

Requirement: Prepare and sort the laundry.
→ *"Laundry", Page 35*

1. Open the door.

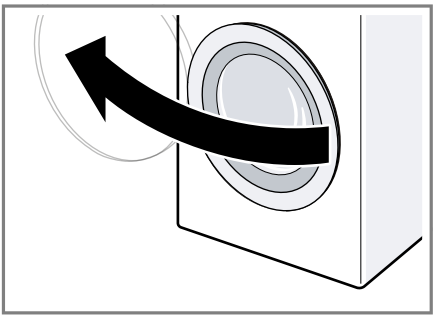

2. Ensure that the drum is empty.
3. Separate the laundry and place it in the drum.
4. **Note:** Ensure that there is no laundry trapped in the door.

   Close the door.

Using a measuring aid for liquid detergent

To add liquid detergent, you can place a measuring aid in the detergent drawer.

1. Pull out the detergent drawer.

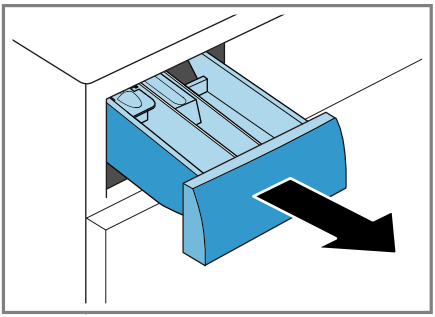

2. Press down on the insert and remove the detergent drawer.

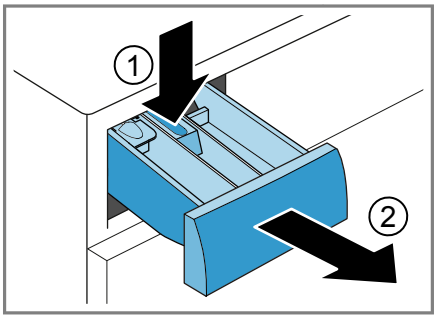

3. **Note:** If you order the measuring aid as an accessory → *Page 34*, you must use the measuring aid.

   Insert the measuring aid.

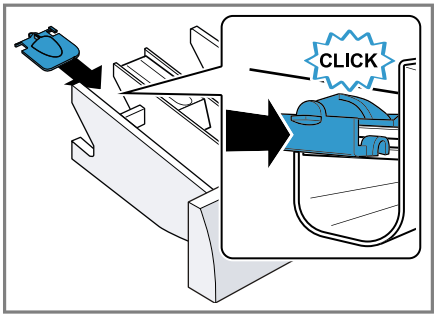

4. Slide the measuring aid forwards.

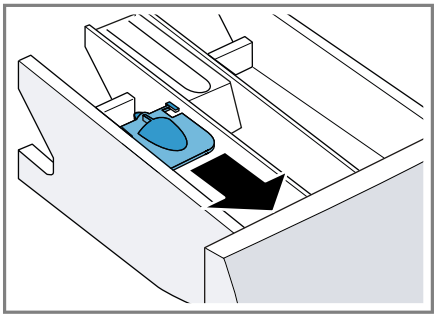

5. Fold the measuring aid down and click it into place.

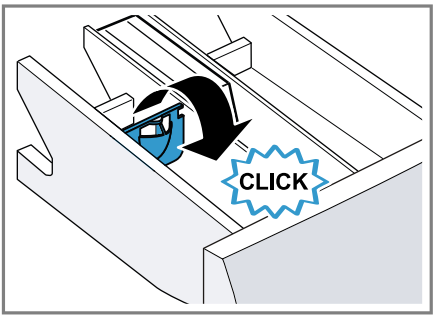

6. Reinsert the detergent drawer.

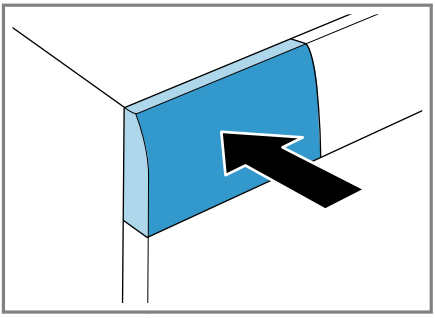

Adding detergent and care product

Notes

- Please read the safety information → *Page 4* to ensure that you use the appliance safely.
- Do not use the measuring aid for liquid detergent for gel detergents, washing powder, or if Prewash or "Ready in" time are activated.

Requirement: Find out the optimum dosage for detergent and care product. → *Page 36*

1. Pull out the detergent drawer.
2. Pour in detergent. → *"Detergent drawer", Page 20*
3. If required, add the care product.
4. Push in the detergent drawer.

Starting the programme

Note: If you want to change the time until the programme ends, set the "Ready in" time first.

- ▸ Press **Start** / **Reload** .
- ✔ The drum rotates and load detection takes place. This can take up to 2 minutes, after which water enters the drum.
- ✔ The display shows either the programme duration or the "Ready in" time.

Adding laundry

Note: Please read the safety information → *Page 4* to ensure that you use the appliance safely.

1. Press **Start** / **Reload** .

   The appliance is paused and checks whether it is possible to add or remove laundry.
2. Add or remove laundry.
3. Close the door.
4. Press **Start** / **Reload** .

Cancelling the programme

Once the programme has started, you can cancel it at any time.

Note: Please read the safety information → *Page 4* to ensure that you use the appliance safely.

1. Press **Start** / **Reload** .
2. Open the door.

   The appliance door remains locked for safety reasons if the temperature and water levels are high.
   - If the temperature is high, start the **Rinse** programme.
   - If the water level is high: Start the **Spin** or **Drain** programme.
3. Remove the laundry.

Resuming the programme when the programme status is Rinse Hold

1. Set the **Spin** or **Drain** programme.
2. Press **Start** / **Reload** .

Unloading the laundry

Note: Please read the safety information → *Page 4* to ensure that you use the appliance safely.

1. Open the door.
2. Remove the laundry.

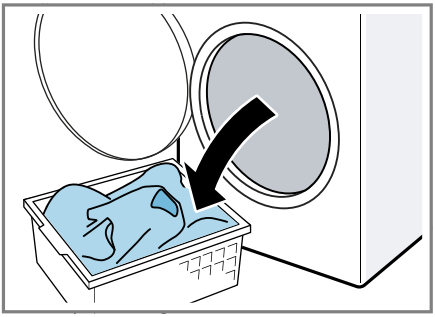

Switching off the appliance

1. Press ⏻.

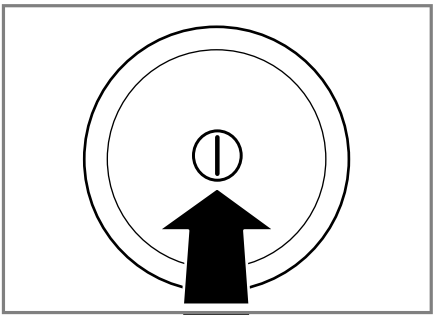

2. Wipe the rubber gasket dry and remove any foreign objects.

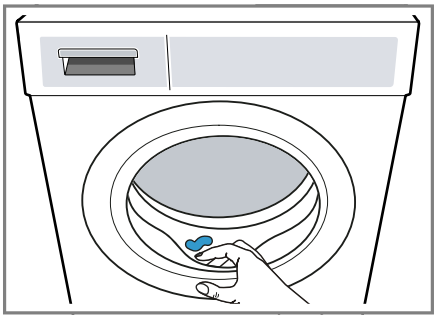

3. Leave the door and detergent drawer open so that residual water can evaporate.

Childproof lock

Secure your appliance against being operated unintentionally using the controls.

Activating the childproof lock

- Press and hold the two **Child Lock 3 sec.** buttons for approx. 3 seconds.
- ✔ The display shows .
- ✔ The controls are locked.
- ✔ The childproof lock remains active even after the appliance has been switched off.

Deactivating the childproof lock

Requirement: To deactivate the childproof lock, the appliance must be switched on.

- Press and hold the two **Child Lock 3 sec.** buttons for approx. 3 seconds.

  So that the programme currently running is not cancelled, the programme selector must be set to the initial programme.
- ✔ goes out in the display.

Home Connect

This appliance is network-capable. Connecting your appliance to a mobile device lets you control its functions via the Home Connect app, adjust its basic settings and monitor its operating status.
Home Connect services are not available in every country. The availability of the Home Connect function depends on the availability of Home Connect services in your country. You can find information about this at: www.home-connect.com.
To use Home Connect, first set up a connection to the WLAN home network (Wi-Fi[1]) or LAN home network and the Home Connect app.
There are various ways to connect to your home network, depending on the features of your appliance:

- → *"Connecting the appliance to a WLAN home network (Wi-Fi) with WPS function", Page 43*
- → *"Connecting the appliance to a WLAN home network (Wi-Fi) without WPS function", Page 44*

The Home Connect app will guide you through the entire login process. Follow the instructions in the Home Connect app to configure the settings.

Tips

- Please consult the Home Connect documents supplied.
- Please also follow the instructions in the Home Connect app.

Notes

- Please note the safety precautions in this instruction manual and make sure that they are also observed when operating the appliance via the Home Connect app.
  → *"Safety", Page 4*
- Operating the appliance on the appliance itself always takes priority. During this time it is not possible to operate the appliance using the Home Connect app.

Connecting the appliance to a WLAN home network (Wi-Fi) with WPS function

Using your router's WPS function is the simplest way to connect the appliance to your home network.

Requirement: If your router has a WPS function, you can connect the appliance to your WLAN home network (Wi-Fi) automatically.

1. Press and hold **Remote Start** for approx. 3 seconds.
   ✔ You are now in the Home Connect menu.
2. Select **Connect**.
3. Confirm the message in the display.
4. Press the WPS button on the router within the next 2 minutes.

   Take note of the information in the documents for your router.
   ✔ flashes in the display.
   ✔ The appliance attempts to connect to your WLAN home network.
   ✔ If the display shows **Connected** and lights up permanently, the appliance is connected to the home network.

[1] Wi-Fi is a registered trademark of the Wi-Fi Alliance.

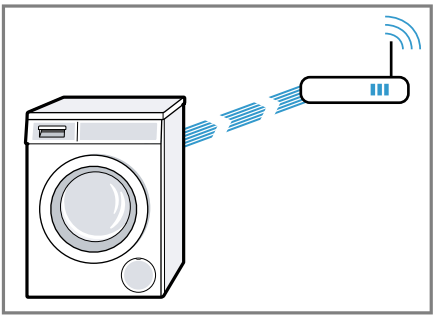

5. Connect your appliance to the Home Connect app. → *Page 45*

Connecting the appliance to a WLAN home network (Wi-Fi) without WPS function

If your router does not have a WPS function, you can connect the appliance to your WLAN home network (Wi-Fi) manually. The appliance quickly sets up its own Wi-Fi network. You can connect a mobile device to the WLAN network and transfer the network information for the WLAN home network (Wi-Fi) to your appliance.

Requirement: The Home Connect app is open and you have logged on.

1. Press and hold **Remote Start** for at least 3 seconds.
✔ You are now in the Home Connect menu.
2. Select **Man. network log-in**.
3. Select **Connect**
4. Confirm the message in the display.
✔ flashes in the display.
✔ The appliance now sets up its own Wi-Fi network with the name (SSID) HomeConnect.

5. Call up the Wi-Fi settings on the mobile device.

   Connect the mobile device to the Home Connect Wi-Fi network and enter the password (key) HomeConnect.
✔ Your mobile device now connects to the appliance. The connection process may take up to 60 seconds.

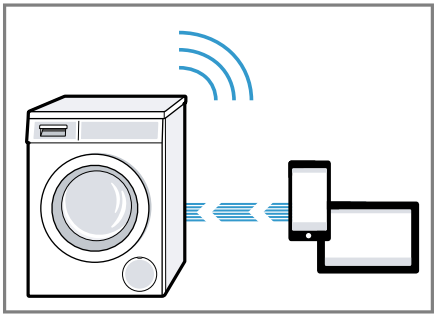

6. Open the Home Connect app on your mobile device and carry out the steps in the app.
7. In the Home Connect app, enter the network name (SSID) and password (key) for your home network.
8. Carry out the steps in the Home Connect app to connect the appliance.
✔ If the display shows **Connected** and lights up permanently, the appliance is connected to the home network.
9. Connect your appliance to the Home Connect app → *Page 45*.

Connecting your appliance to the Home Connect app

Requirements

- The appliance is connected to the WLAN home network (Wi-Fi).
- The Home Connect app is open and you have logged on.

1. Select **Connect app**.
2. Select **Connect to the app**.
3. Confirm the message in the display.
✔ The appliance connects to the Home Connect app.
4. Once your appliance is displayed in the Home Connect app, carry out the last steps in the Home Connect app.
✔ If the display shows **Connected**, the appliance is connected to the Home Connect app.

Connecting the appliance to the energy manager

If you connect the appliance to the smart energy system (energy manager), you will optimise your energy consumption. The appliance starts only when your home photovoltaic system can provide sufficient energy or the energy tariff is good.

Requirements

- The smart energy system (energy manager) must use the EEBus Initiative communications standard.
- You have read about how to connect your appliance to the smart energy system (energy manager) in the instruction manual for the smart energy system (energy manager).

1. Press and hold **Remote Start** for approx. 3 seconds.
2. Select **energy mngmt.**.
3. Select **Connect**.
4. Confirm the message in the display.
✔ The appliance is connected to the smart energy system (energy manager)
✔ If the appliance has connected to the energy manager successfully, the display shows .
5. Activate Flex Start if you want the smart energy system (energy manager) to start up your appliance.
→ *"Activate Flex Start", Page 45*

Activate Flex Start

Activate Flex Start to allow your smart energy system (energy manager) to start your appliance once your home photovoltaic system is able to provide sufficient energy or the energy tariff is good.

Requirement: The smart energy system (energy manager) cannot start your appliance until it is connected to the appliance.

1. Set the programme you require.
2. Press **Ready In** to set the required time.
3. Press **Start** / **Reload** .
✔ The display shows **Delayed start**.
4. Press **Remote Start**.
✔ If the display shows **Flex Start**, Flex Start is activated and the appliance waits to be started by the smart energy system (energy manager).
✔ If the display changes to **: Ready in approx.**, the smart energy system (energy manager) has established a time at which your appliance can start.
✔ If the smart energy system (energy manager) does not start the appliance within the set time, the appliance will start the programme itself before the set time period ends. The programme ends when the time period ends.

Note
Flex Start is deactivated for safety reasons in the following circumstances:
- Press **Start** / **Reload** .
- Open the door.
- Switch off the appliance.
- Power failure.

Activating Wi-Fi on the appliance

Note: When Wi-Fi is activated, the energy consumption increases in comparison to the values specified in the consumption value table.

1. Press and hold **Remote Start** for approx. 3 seconds.
2. Select **Wi-Fi on/off**.
3. Select **on**.
✔ Wi-Fi is activated.

Note: If Wi-Fi is activated, the appliance will not switch itself off automatically.

Deactivating Wi-Fi on the appliance

1. Press and hold **Remote Start** for at least 3 seconds.
2. Select **Wi-Fi on/off**.
3. Select **off**.
✔ Wi-Fi is deactivated

Note: If Wi-Fi is switched off and your appliance was previously connected to your home network, this connection will be re-established automatically when Wi-Fi is switched back on.

Software update

Requirement: The display shows **A new software version is available. Do you want to update the software now? This may take several minutes.** .

1. Press and hold **Remote Start** for approx. 3 seconds.
2. Select **Software update**.
3. Select **Install now**.
✔ The software update starts.

Note: The software update may take several minutes. Do not switch off the appliance while the software update is in progress.

Resetting the appliance network settings

1. Press and hold **Remote Start** for at least 3 seconds.
2. Select **Network settings**.
3. Select **Reset**.
✔ The network settings are reset.

Tip: If you wish to operate your appliance again via the Home Connect app, you will need to reconnect it to the Wi-Fi and to the Home Connect app.

Remote diagnostics

Customer Service can use Remote Diagnostics to access your appliance if you contact them, have your appliance connected to the Home Connect server and if Remote Diagnostics is available in the country in which you are using the appliance.

Tip: For further information and details about the availability of Remote Diagnostics in your country, please visit the service/support section of your local website: www.home-connect.com

Data protection

Please see the information on data protection.
The first time your appliance is registered on a home network connected to the Internet, your

appliance will transmit the following types of data to the Home Connect server (initial registration):

- Unique appliance identification (consisting of appliance codes as well as the MAC address of the Wi-Fi communication module installed).
- Security certificate of the Wi-Fi communication module (to ensure a secure data connection).
- The current software and hardware version of your appliance.
- Status of any previous reset to factory settings.

This initial registration prepares the Home Connect functions for use and is only required when you want to use the Home Connect functions for the first time.

Note: Please note that the Home Connect functions can only be utilised with the Home Connect app. Information on data protection can be retrieved in the Home Connect app.

Declaration of Conformity

BSH Hausgeräte GmbH hereby declares that the appliance with Home Connect functionality meets the essential requirements and other relevant provisions of the Directive 2014/53/EU.
A detailed RED Declaration of Conformity can be found online at www.bosch-home.com among the additional documents on the product page for your appliance.

CE

2.4 GHz band: 100 mW max.
5 GHz band: 100 mW max.

BE	BG	CZ	DK	DE	EE	IE	EL
ES	FR	HR	IT	CY	LV	LT	LU
HU	MT	NL	AT	PL	PT	RO	SI
SK	FI	SE	UK	NO	CH	TR	

5 GHz WLAN (Wi-Fi): For indoor use only.

Basic settings

You can configure the appliance to meet your needs.

Overview of the basic settings

Below is an overview of the basic settings on the appliance.

Basic setting	Description
end signal	Set the volume of the signal at the end of the programme.
button signal	The volume of the audible signal emitted when the buttons are pressed.

Basic setting	Description
auto power-off	Activate or deactivate the "Automatic switch-off" function for the appliance or set the time after which the appliance automatically switches itself off. → *"Save energy and conserve resources", Page 12* **Note:** If Wi-Fi is activated, the appliance will not switch itself off automatically.
Drum clean advice	Activate or deactivate the reminder to clean the drum.
Language	Set the language.
Aut. network log-in	Connect the appliance to a WLAN home network (Wi-Fi) with WPS function → *Page 43*
Man. network log-in	Connect the appliance to a WLAN home network (Wi-Fi) without WPS function. → *Page 44*
Connect app	Connect your appliance to the Home Connect app → *Page 45*.
Wi-Fi on/off	Activate or deactivate Wi-Fi. → *"Activating Wi-Fi on the appliance", Page 46* → *"Deactivating Wi-Fi on the appliance", Page 46*
Software update	Install the software update. → *Page 46*
Network settings	Reset the network settings. → *Page 46*
energy mngmt.	Connect the appliance to the energy manager. → *Page 45*

Changing the basic settings

1. To call up the basic settings for the sub-menu, press and hold both buttons **Basic Settings 3 Sec.** for approx. 3 seconds.
2. Select the required basic setting. → *"Overview of the basic settings", Page 47*
3. Adjust the basic setting.
4. Press **Basic Settings 3 Sec.** to call up the main menu.

Cleaning and servicing

To keep your appliance working efficiently for a long time, it is important to clean and maintain it carefully.

Tips on appliance care

Follow the tips for appliance care to ensure your appliance works correctly in the long term.

Wipe down the housing and the control panel with nothing but water and a damp cloth.	The appliance parts remain clean and hygienic.
Remove all detergent residue, spray residue or other residues immediately.	Fresh deposits are easier to remove without leaving any residue.
Keep the appliance door and detergent drawer open after use.	This allows the residual water to dry, reducing odours in the appliance.

Cleaning the drum

If you often wash at a washing temperature of 40 °C and lower or the appliance has not been used for a long period, clean the drum.

- Run the **Drum clean** programme without laundry.

  Add washing powder.

Cleaning the detergent drawer

Note: Please read the safety information → *Page 4* to ensure that you use the appliance safely.

1. Pull out the detergent drawer.
2. Press down on the insert and remove the detergent drawer.

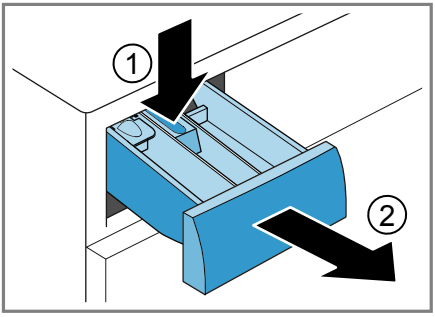

3. Press out the insert upwards from below.

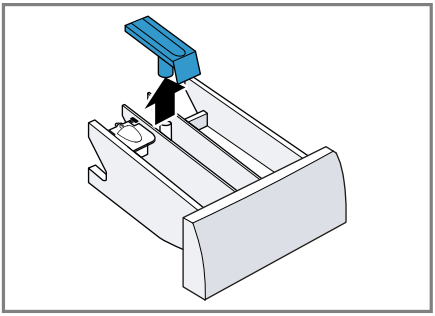

4. Clean the detergent drawer and insert with water and a brush, and then dry them.

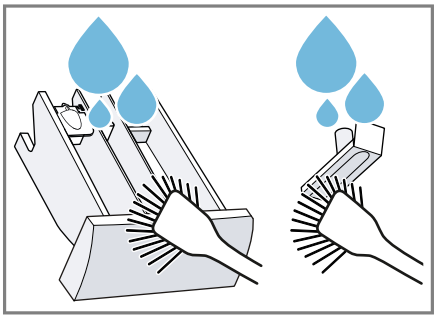

5. Fit the insert and lock it into place.

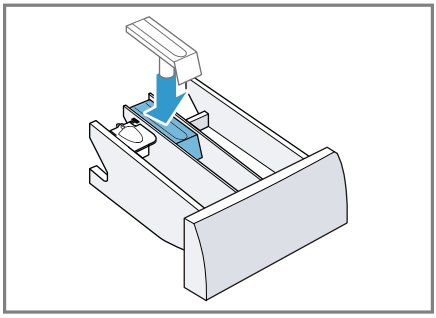

6. Cleaning the opening for the detergent drawer.

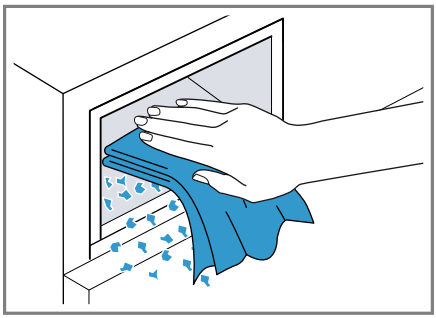

7. Push in the detergent drawer.

Descaling

If you add detergent correctly, you do not need to descale your appliance. If you still wish to use descaler, follow the manufacturer's instructions for use.

ATTENTION!
The use of unsuitable descaling agents, e.g. for coffee machines, may damage the appliance.

- For this appliance, only use descaling agents that are available from the manufacturer's website or our after-sales service.

Cleaning the drain pump

Clean the drain pump in the event of faults, e.g. blockages or rattling noises.

Emptying the drain pump

Note: Please read the safety information → *Page 4* to ensure that you use the appliance safely.

1. Turn off the water tap.
2. Switch off the appliance.
3. Disconnect the appliance's mains plug from the power supply.
4. Open the maintenance flap.

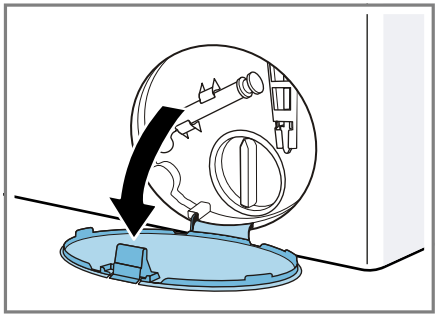

5. Remove the maintenance flap.

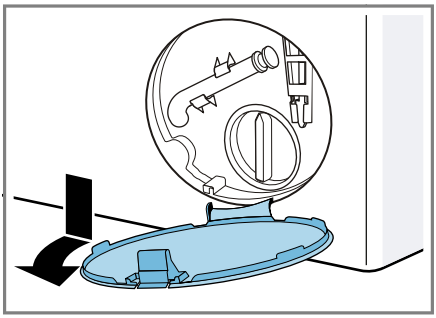

6. Push a receptacle under the opening.

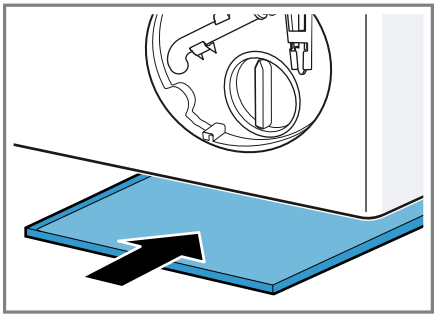

7. Take the drain hose out of the holder.

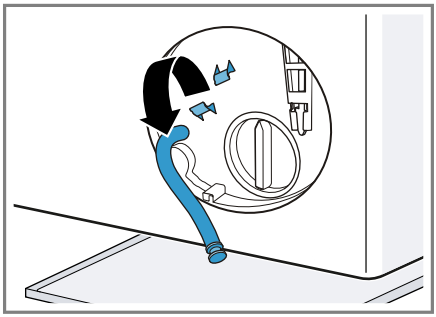

8. ⚠ **CAUTION - Risk of scalding!**
When you wash at high temperatures, the detergent solution gets hot.
- Do not touch the hot detergent solution.

To allow the detergent solution to flow out into the container, remove the sealing cap.

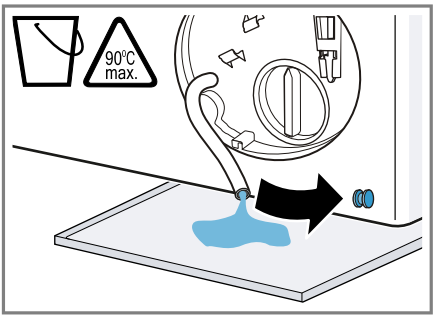

9. Firmly press on the sealing cap.

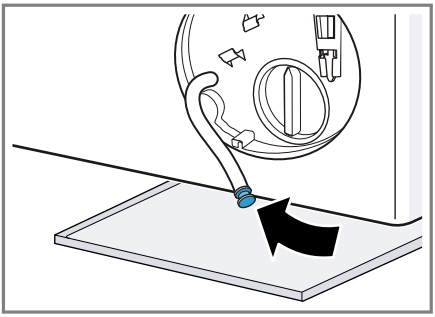

10. Insert the drain hose into the holder.

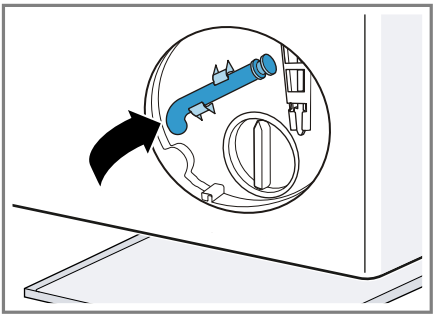

Cleaning the drain pump

Note: Please read the safety information → *Page 4* to ensure that you use the appliance safely.

Requirement: The drain pump is empty. → *Page 50*

1. Because water may remain in the drain pump, remove the pump cap carefully.

– The filter insert in the pump housing may become stuck due to coarse particles of dirt. Loosen the dirt and remove the filter insert.

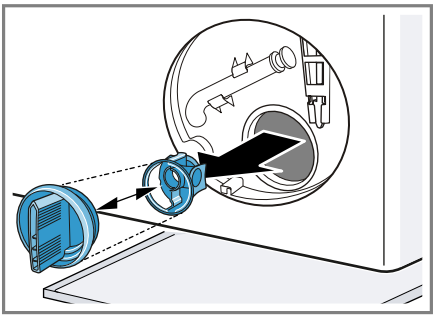

2. Clean the inside and the thread on the pump cap and pump housing.

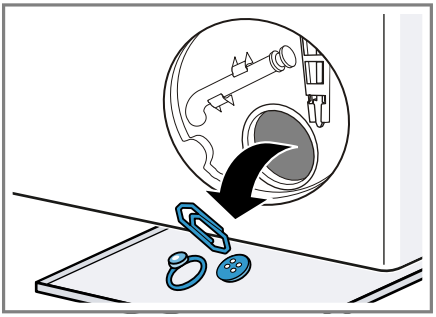

3. Make sure that the impeller in the drain pump can be turned.
4. Replace the pump cap.

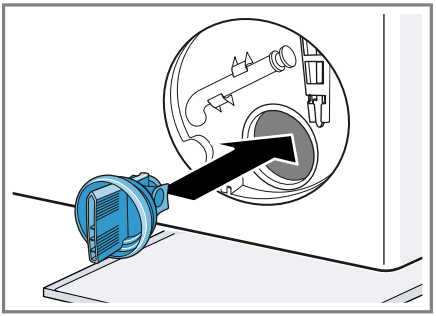

Make sure that the components of the pump cap are securely seated.

5. Screw on the pump cap.

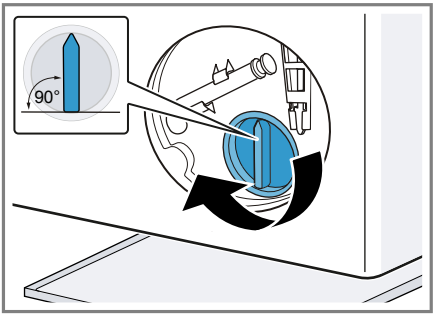

The handle on the pump cap must be in a vertical position.

6. Insert the maintenance flap and lock it into place.

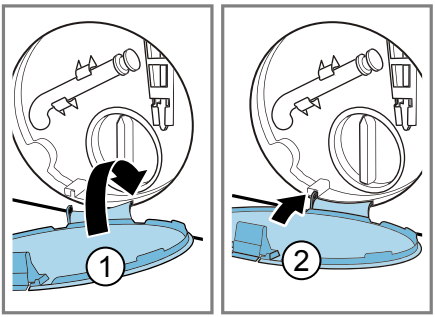

7. Close the maintenance flap.

Before the next wash

To prevent unused detergent from flowing straight into the outlet in the next wash, run the **Drain** programme after you have emptied the drain pump.

1. Turn on the tap.
2. Insert the mains plug.
3. Switch on the appliance.
4. Pour 1 litre of water into compartment II.
5. Start the **Drain** programme.

Cleaning the water outlet hose at the siphon

If the water outlet hose at the siphon is dirty or the detergent solution is not being pumped out, you must clean these.

1. Switch off the appliance.
2. Disconnect the appliance's mains plug from the power supply.
3. Loosen the hose clamp and carefully remove the water outlet hose.

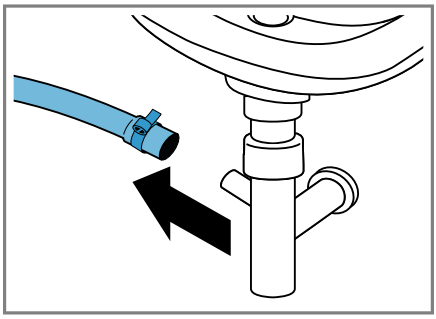

Residual water may leak out.

4. Clean the water outlet hose and siphon connecting piece.

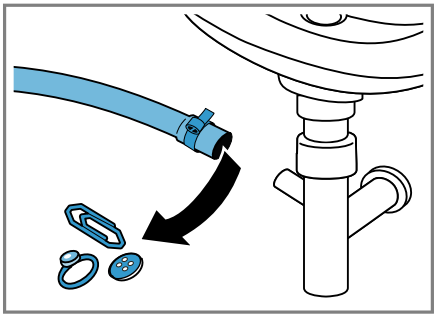

5. Reattach the water outlet hose and secure the connection point using the hose clamp.

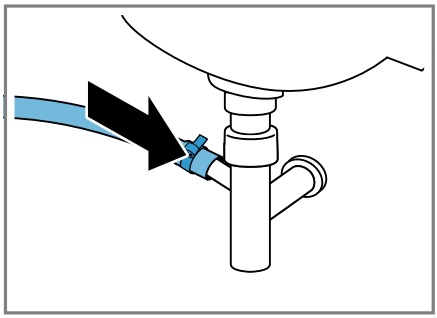

Cleaning the water inlet filter

Clean the filter in the water inlet in the event of blockages or if the water pressure is too low.

Emptying the water inlet hose

In order to clean the filter, first empty the water inlet hose.

1. Turn off the tap.
2. Set a programme, except for **Rinse**, **Spin** or **Drain**.
3. Start the programme and leave it to run for approx. 40 seconds.
4. Switch off the appliance.
5. Disconnect the appliance's mains plug from the power supply.

Cleaning the filter on the tap

Note: Please read the safety information → *Page 4* to ensure that you use the appliance safely.

Requirement: The water inlet hose is empty.

1. Remove the water inlet hose from the tap.

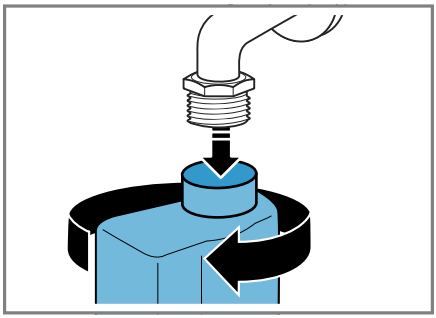

2. Clean the filter with a small brush.

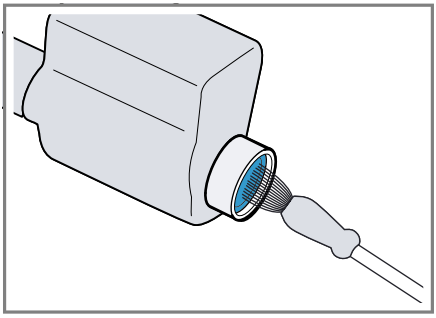

3. Connect the water inlet hose and check for leaks.

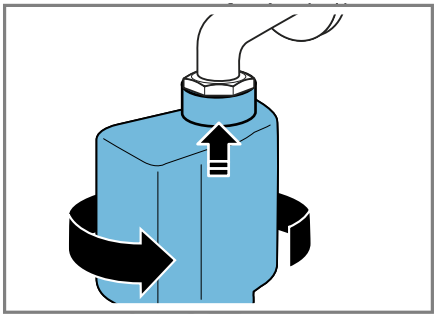

Troubleshooting

You can rectify minor faults on your appliance yourself. Read the troubleshooting information before contacting Customer Service. This will avoid unnecessary costs.

⚠ **WARNING**
Risk of electric shock!
Improper repairs are dangerous.
- ▶ Repairs to the appliance should only be carried out by trained specialist staff.
- ▶ Only use genuine spare parts when repairing the appliance.
- ▶ If the power cord of this appliance is damaged, it must be replaced by the manufacturer, the manufacturer's Customer Service or a similarly qualified person in order to prevent any risk.

Error code / Fault display / Signal

Errors	Cause	Troubleshooting
The display goes out and **Start / Reload** flashes.	Energy-saving mode is active	▶ Press any button. ✔ The symbol lights up again.
"E:30 / -80"	Drain pipe or water outlet hose is blocked.	▶ Clean the drain pipe and the water outlet hose.
	Drain pipe or water drain hose is caught or jammed.	▶ Ensure that the drain pipe and water drain hose are not kinked or trapped.
	Drain pump is blocked.	▶ → *"Cleaning the drain pump", Page 50*
	The water outlet hose is connected too high.	▶ Install the water outlet hose at a maximum height of 1 metre. → *"Technical specifications", Page 66*
"E:36 / -25 / -26"	Drain pump is blocked.	▶ → *"Cleaning the drain pump", Page 50*
"E:60 / -2B"	The unbalanced load detection system has interrupted the spin cycle because the laundry is unevenly distributed.	▶ Redistribute the laundry in the drum. **Note:** Where possible, mix large and small items in the drum. Different sized items of laundry distribute themselves better during the spin cycle.
"E:10 / -10"	The filter in the water inflow is blocked.	▶ Clean the water inflow filter → *Page 53*.
	The tap is turned off.	▶ Turn on the tap.
	The water inlet hose is kinked or jammed.	▶ Ensure that the water inlet hose is not kinked or jammed.

Errors	Cause	Troubleshooting
"E:35 / -10"	There is water in the base trough.	▶ Turn off the water tap. ▶ Call the after-sales service. → *"Customer Service", Page 63*
	The appliance is leaking.	▶ Turn off the water tap. ▶ Call the after-sales service. → *"Customer Service", Page 63*
All other error codes.	Malfunction	▶ Call the after-sales service. → *"Customer Service", Page 63*
Cooling down the detergent solution.	To protect the wastewater pipes, the hot detergent solution is cooled before being drained.	▶ Wait until the detergent solution has cooled down.

Malfunctions

Errors	Cause	Troubleshooting
The appliance is not working.	The mains plug of the power cord is not plugged in.	▶ Connect the appliance to the power supply.
	The circuit breaker is faulty.	▶ Check the circuit breaker in the fuse box.
	There has been a power cut.	▶ Check whether the lighting in your kitchen or other appliances are working.
The programme does not start.	You have not pressed **Start / Reload** .	▶ Press **Start / Reload** .
	Door is not closed.	1. Close the door. 2. Press **Start / Reload** to start the programme.
	Childproof lock is activated.	▶ → *"Deactivating the childproof lock", Page 42*
	Ready In is activated.	▶ Check whether **Ready In** is activated. → *"Buttons", Page 30*
	Laundry is caught in the door.	1. Open the door again. 2. Remove any trapped laundry. 3. Close the door. 4. Press **Start / Reload** to start the programme.

Errors	Cause	Troubleshooting
The door cannot be opened.	**Rinse Hold** is activated.	▶ Continue the programme by selecting **Spin** or **Drain** and pressing **Start / Reload** . → *"Resuming the programme when the programme status is Rinse Hold", Page 42*
	The temperature is too high.	▶ Wait until the temperature has dropped. ▶ → *"Cancelling the programme", Page 41*
	Water level is too high.	▶ Start the **Drain** programme.
	Power failure.	▶ Open the door using the emergency release. → *"Emergency release", Page 61*
The water is not draining.	Drain pipe or water outlet hose is blocked.	▶ Clean the drain pipe and the water outlet hose.
	Drain pipe or water drain hose is caught or jammed.	▶ Ensure that the drain pipe and water drain hose are not kinked or trapped.
	Drain pump is blocked.	▶ → *"Cleaning the drain pump", Page 50*
	Rinse Hold is activated.	▶ Continue the programme by selecting **Spin** or **Drain** and pressing **Start / Reload** . → *"Resuming the programme when the programme status is Rinse Hold", Page 42*
	The water outlet hose is connected too high.	▶ Install the water outlet hose at a maximum height of 1 metre. → *"Technical specifications", Page 66*
Water is not flowing in. Detergent is not being dispensed.	You have not pressed **Start / Reload** .	▶ Press **Start / Reload** .
	The filter in the water inflow is blocked.	▶ Clean the water inflow filter → *Page 53*.
	The tap is turned off.	▶ Turn on the tap.
	The water inlet hose is kinked or jammed.	▶ Ensure that the water inlet hose is not kinked or jammed.

Errors	Cause	Troubleshooting
The spin cycle runs several times.	The unbalanced load detection system eliminates an imbalance by repeatedly redistributing the laundry.	▶ Not a fault – no action required. **Note:** When loading, where possible, place large and small items of laundry together in the drum. Different sized items of laundry distribute themselves better during the spin cycle.
The programme duration changes during the wash cycle.	The programme operation is optimised electronically. This may change the programme duration.	▶ Not a fault – no action required.
	The unbalanced load detection system eliminates an imbalance by repeatedly redistributing the laundry.	▶ Not a fault – no action required. **Note:** When loading, where possible, place large and small items of laundry together in the drum. Different sized items of laundry distribute themselves better during the spin cycle.
	Foam detection system switches on a rinse cycle if foam build-up is too high.	▶ Not a fault – no action required.
No water is visible in the drum.	Water is below the visible area.	▶ Not a fault – no action required.
Drum jerks after the programme starts.	This is caused by an internal motor test.	▶ Not a fault – no action required.
Residual water is present in the compartment ❀.	Insert in compartment ❀ is blocked.	▶ → *"Cleaning the detergent drawer", Page 49*
Vibrations and movement of the appliance whilst spinning.	Appliance is not correctly aligned.	▶ → *"Aligning the appliance", Page 17*
	The appliance feet are not fixed.	▶ Secure the appliance feet. → *"Aligning the appliance", Page 17*
	Transit bolts have not been removed.	▶ → *"Removing the transit bolts", Page 14*
Drum does not turn, water does not flow in.	Load detection is active.	▶ Not a fault – no action required. **Note:** The load detection can take up to two minutes.

Errors	Cause	Troubleshooting
Heavy foam build-up	Detergent dosage is too high.	▶ Immediate measure: Mix one tablespoon of fabric softener with 0.5 litres of water and pour the mixture into the left-hand compartment (not for outdoor clothing, sportswear or items stuffed with down). ▶ Reduce the amount of detergent for the next washing cycle with the same load.

Noise

Errors	Cause	Troubleshooting
Rushing, hissing noise.	Water is flushed under pressure into the detergent drawer.	▶ Not a fault – normal operating noise.
Loud noises during the spin cycle.	Appliance is not correctly aligned.	▶ → *"Aligning the appliance", Page 17*
	The appliance feet are not fixed.	▶ Secure the appliance feet. → *"Aligning the appliance", Page 17*
	Transit bolts have not been removed.	▶ → *"Removing the transit bolts", Page 14*
Banging noises, rattling in the drain pump.	Foreign bodies have got into the drain pump.	▶ → *"Cleaning the drain pump", Page 50*
Slurping, rhythmical suction noise.	The drain pump is active, the detergent solution is pumped out.	▶ Not a fault – normal operating noise.

Problem with results

Errors	Cause	Troubleshooting
Creasing.	The spin speed is too high.	▶ The next time you run a wash cycle, set a lower spin speed.
	The load is too large.	▶ The next time you run a wash cycle, reduce the amount of laundry being loaded.
	The wrong programme is selected for the type of fabric.	▶ Select the programmes that are suitable for the type of fabric. → *"Programmes", Page 24*

Errors	Cause	Troubleshooting
Detergent or fabric softener drips off the seal and collects on the door or in the seal fold.	Too much detergent/fabric softener in the detergent drawer.	▶ When dosing the detergent and fabric softener, observe the marking in the detergent drawer and do not dose above this.
The spin result is not satisfactory. The laundry is too wet/too damp.	A low spin speed is selected.	▶ The next time you run a wash cycle, set a higher spin speed.
	Less Ironing is activated.	▶ Select the programmes that are suitable for the type of fabric. → *"Programmes", Page 24*
	The unbalanced load detection system has interrupted the spin cycle because the laundry is unevenly distributed.	▶ Redistribute the laundry in the drum. **Note:** Where possible, mix large and small items in the drum. Different sized items of laundry distribute themselves better during the spin cycle.
Detergent residue on the damp washing.	Detergents may contain water-insoluble substances that deposit on the laundry.	▶ Start the **Rinse** programme.
Detergent residue on the dry laundry.	Detergents may contain water-insoluble substances that deposit on the laundry.	▶ Brush out the laundry after washing and drying.

Home Connect problem

Errors	Cause	Troubleshooting
HomeConnect is not working correctly.	Different causes are possible.	▶ Go to www.home-connect.com.
No connection to the home network.	Wi-Fi is switched off.	▶ → *"Activating Wi-Fi on the appliance", Page 46*
	Wi-Fi is activated but a connection to your home network cannot be established.	**1.** Ensure that the home network is available. **2.** Reconnect the appliance to the home network. → *"Connecting the appliance to a WLAN home network (Wi-Fi) with WPS function", Page 43* → *"Connecting the appliance to a WLAN home network (Wi-Fi) without WPS function", Page 44*

Leakage

Errors	Cause	Troubleshooting
Water is leaking out at the water inlet hose.	Water inlet hose is not correctly/securely connected.	1. Connect the water supply hose correctly. → *"Connecting the water inlet hose", Page 16* 2. Tighten the screw connection.
Water is leaking out at the water outlet hose.	The water outlet hose is damaged.	▶ Replace the damaged water outlet hose.
	Water outlet hose is not connected correctly.	▶ Connect the water outlet hose correctly. → *"Water outlet connection types", Page 17*

Odours

Errors	Cause	Troubleshooting
Odours have formed in the appliance.	Humidity and detergent residue may promote the formation of bacteria.	▶ → *"Cleaning the drum", Page 49*

Emergency release

To remove the laundry in the event of a power failure, for example, you can manually release the door.

Releasing the door

Requirement: The drain pump is empty. → *Page 50*

1. **ATTENTION!** Escaping water may cause material damage.
   ▸ Do not open the door if you can see water through the glass.

   Pull the emergency release downwards with a tool and release.

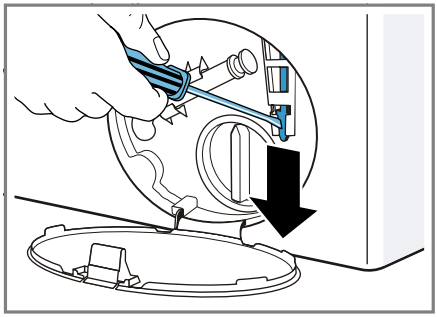

✔ The door lock is released.

2. Insert the service flap and lock it into place.
3. Close the maintenance flap.

Transportation, storage and disposal

You can find out here how to prepare your appliance for transportation and storage. You will also find out how to dispose of old appliances.

Removing the appliance

1. Turn off the tap.
2. → *"Emptying the water inlet hose", Page 53*.
3. Switch off the appliance.
4. Unplug the appliance's mains plug.
5. Drain the remaining detergent solution.
   → *"Cleaning the drain pump", Page 50*
6. Detach the hoses.

Inserting the transit bolts

Secure the appliance for transportation using transit bolts in order to prevent damage.

1. Remove the four cover caps.
   – If necessary, use a screwdriver to remove the cover caps.

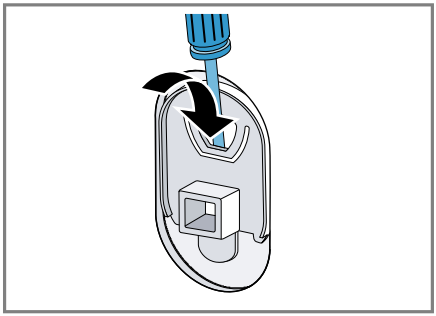

Keep the cover caps.

2. Insert the four sleeves.

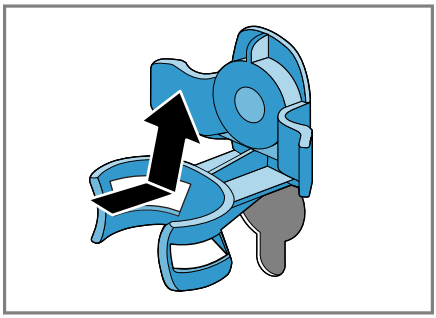

3. Insert all screws into the four transit bolts and tighten slightly.

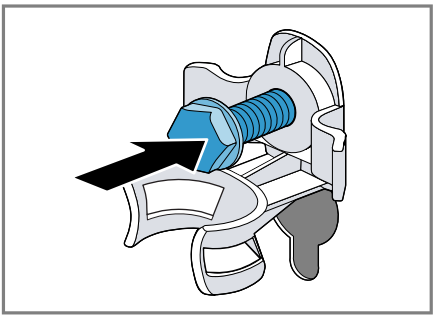

4. Insert the power cord into the holder ① and tighten all four screws for the transit bolts with a WAF 13 wrench ②.

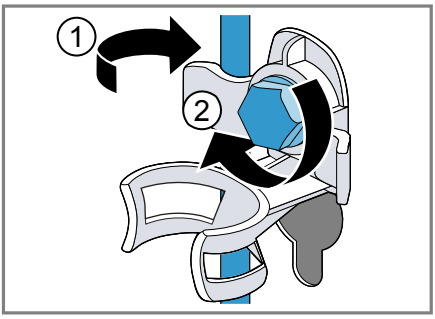

5. Insert the hose into holder.

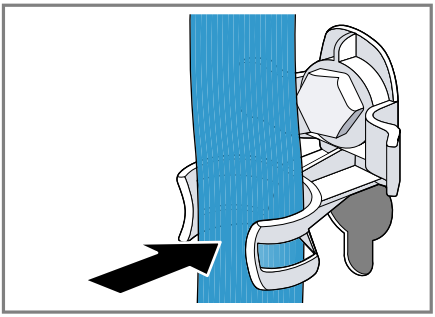

Using the appliance again

1. Remove the transit bolts → *Page 14*.
2. Pour approx. 1 litre of water into compartment II in the detergent drawer.
3. Start the **Drain** programme.

✔ The unused detergent cannot flow straight into the outlet during the next wash.

Disposing of old appliance

Valuable raw materials can be reclaimed by recycling.

⚠ **WARNING**
Risk of harm to health!
Children can lock themselves in the appliance, thereby putting their lives at risk.

- ▶ Do not install the appliance behind a door as this may obstruct the appliance door or prevent it from opening.
- ▶ With redundant appliances, unplug the power cord. Then cut through the cord and damage the lock on the appliance door beyond repair so that the appliance door will no longer close.

1. Unplug the appliance from the mains.
2. Cut through the power cord.
3. Dispose of the appliance in an environmentally friendly manner.

This appliance is labelled in accordance with European Directive 2012/19/EU concerning used electrical and electronic appliances (waste electrical and electronic equipment - WEEE).
The guideline determines the framework for the return and recycling of used appliances as applicable throughout the EU.

Customer Service

If you have any queries on use, are unable to rectify faults on the appliance yourself or if your appliance needs to be repaired, contact Customer Service. You can solve many problems yourself by consulting the information on troubleshooting in these instructions or on our website. If this is not the case, contact our Customer Service.
We will always find an appropriate solution and try to avoid unnecessary visits being made by a Customer Service technician.
With any warranty claims we will make sure that your appliance is repaired by trained Customer Service technicians using genuine spare parts, including after the manufacturer's warranty has expired.
For safety reasons repairs to the appliance should only be carried out by trained specialist staff. The warranty claim becomes void if repairs or interventions have been carried out by persons not authorised by us for that purpose or if our appliances have been fitted with spare, supplementary or accessory parts that were not genuine parts and then resulted in a defect.
Function-relevant genuine spare parts according to the corresponding Ecodesign Order can be obtained from Customer Service for a period of at least 10 years from the date on which your appliance was placed on the market within the European Economic Area.

Note: Under the terms of the manufacturer's warranty the use of Customer Service is free of charge.

Detailed information about the warranty period and terms of warranty in your country are available from Customer Service, your dealer or our website.
When contacting Customer Service, you will need the product number (E-Nr.) and the production number (FD) of your appliance.
The contact details for Customer Service can be found in the enclosed Customer Service directory or on our website.

Product number (E-Nr.) and production number (FD)

The product number (E-Nr.) and the production number (FD) can be found on the rating plate of the appliance. Depending on the model, the rating plate can be found:

- on the inside of the door.
- on the inside of the service flap.
- on the rear of the appliance.

Make a note of your appliance's details and the Customer Service telephone number to find them again quickly.

AQUA-STOP guarantee[1]

In addition to warranty claims against the seller under the purchase agreement and in addition to our manufacturer's warranty, we will provide a replacement under the following conditions.

- If our Aqua-Stop system is defective and causes water damage, we will make good the damage for private users. To ensure protection from water damage, the appliance must be connected to the power supply.
- The liability guarantee is valid for the service life of the appliance.

[1] Depending on the appliance specifications

- A claim can only be made under the guarantee if the appliance has been correctly installed and connected with Aqua-Stop according to our instructions; this also includes correctly fitting the Aqua-Stop extension (genuine accessory). Our guarantee does not cover defective supply lines or fittings up to the Aqua-Stop connection on the tap.
- If your appliance is fitted with Aqua-Stop, you can leave your appliance unattended during operation and the tap turned on afterwards. The tap only needs to be turned off if you are away from home for a long period, e.g. on holiday for several weeks.

Consumption values

The indicated consumption values are approximate.
The values may deviate from the indicated values depending on water pressure, water hardness, water inlet temperature, ambient temperature, type of laundry, amount and soiling of laundry, detergent used, fluctuations in the mains voltage and selected settings.

Programme	Temperature (°C)	Load (kg)	Energy consumption (kWh)[1]	Water consumption (l)[1]	Programme duration (hours)[1]	Residual moisture (%)[1, 2]
Cottons	20	10	0,50	95	3	44
Cottons [3]	40	10	1,30	95	3 3/4	44
Cottons	60	10	2,10	95	3 3/4	44
Cottons Eco [4]	60°C	10	0,98	60	4 3/4	44
Cottons Eco [4]	60°C	5	0,55	50	4 1/4	44
Cottons Eco [4]	40°C	5	0,61	50	3	44
Cottons	90	10	2,50	110	3	44
Easy Care [3]	40	4	0,75	57	2 1/2	40
Mixed Fabrics	40	4	0,65	44	1	60
Delicate / Silk	30	2	0,22	36	3/4	30
Wool	30	2	0,21	40	3/4	45

[1] Values in accordance with the applicable version of EN60456
[2] Information on residual moisture based on programme-dependent spin-speed limit and maximum loads.
[3] Information for test institutes: During a test in compliance with the applicable standard EN60456, you must select the maximal possible spin speed.
[4] Programme setting at maximum speed for testing and energy labelling in accordance with Directive 2010/30/EU with cold water (15 °C). These programmes are suitable for cleaning normally soiled cotton items and are the most efficient in terms of combined energy and water consumption. The stated programme temperature is based on the temperature indicated on the care label for the laundry. The actual washing temperature may differ from the stated programme temperature for energy-saving reasons; the washing performance meets legal requirements.

Technical specifications

Facts and figures for your appliance can be found here.

Appliance height	850 mm

[1] Depending on the appliance specifications

Appliance width	600 mm
Appliance depth	640 mm
Weight	73 kg[1]
Maximum load capacity	10 kg
Mains voltage	220 - 240 V, 50 Hz

[1] Depending on the appliance specifications

⊟ Minimum installation protection	10 A
Rated power	2300 W
Power consumption	■ Off mode: 0,1 W ■ Left-on mode: 0,43 W ■ Time in networked standby mode (Wi-Fi): 20 min(s) ■ Networked standby mode (Wi-Fi): 1,3 W
Water pressure	■ Minimum: 100 kPa (1 bar) ■ Maximum: 10 kPa (10 bar)
Length of the water inlet hose	1500 mm
Length of the water outlet hose	1500 mm
Length of the power cord	2100 mm
Max. draining height	100 cm

[1] Depending on the appliance specifications

BSH Hausgeräte GmbH
Carl-Wery-Straße 34
81739 München
GERMANY
www.siemens-home.bsh-group.com

Manufactured by BSH Hausgeräte GmbH under Trademark License of Siemens AG

9001431290 (990710)
en