User Manual

GETTING STARTED? EASY.

ZVENM7K1

EN User Manual
Microwave combi-oven

ZANUSSI

VISIT OUR WEBSITE TO:

Get usage advice, brochures, trouble shooter, service and repair information:
www.zanussi.com/support

⚠ SAFETY INFORMATION

Before the installation and use of the appliance, carefully read the supplied instructions. The manufacturer is not responsible for any injuries or damage that are the result of incorrect installation or usage. Always keep the instructions in a safe and accessible location for future reference.

CHILDREN AND VULNERABLE PEOPLE SAFETY

- This appliance can be used by children aged from 8 years and above and persons with reduced physical, sensory or mental capabilities or lack of experience and knowledge if they have been given supervision or instruction concerning the use of the appliance in a safe way and understand the hazards involved.
- Children between 3 and 8 years of age and persons with very extensive and complex disabilities shall be kept away from the appliance unless continuously supervised.
- Children of less than 3 years of age should be kept away from the appliance unless continuously supervised.
- Do not let children play with the appliance.
- Keep all packaging away from children and dispose of it appropriately.
- Keep children and pets away from the appliance when it operates or when it cools down. Accessible parts may become hot during use.
- If the appliance has a child safety device, it should be activated.
- Children shall not carry out cleaning and user maintenance of the appliance without supervision.

GENERAL SAFETY

- Only a qualified person must install this appliance and replace the cable.

- WARNING: The appliance and its accessible parts become hot during use. Care should be taken to avoid touching heating elements.
- Always use oven gloves to remove or put in accessories or ovenware.
- Before carrying out any maintenance, disconnect the appliance from the power supply.
- WARNING: Ensure that the appliance is switched off before replacing the lamp to avoid the possibility of electric shock.
- Do not use the appliance before installing it in the built-in structure.
- Do not use a steam cleaner to clean the appliance.
- Do not use harsh abrasive cleaners or sharp metal scrapers to clean the glass door since they can scratch the surface, which may result in shattering of the glass.
- If the mains power supply cable is damaged, it must be replaced by the manufacturer, its Authorised Service Centre or similarly qualified persons to avoid an electrical hazard.
- Do not activate the appliance when it is empty. Metal parts inside the cavity can create electric arcing.
- Metallic containers for food and beverages are not allowed during microwave cooking. This requirement is not applicable if the manufacturer specifies size and shape of metallic containers suitable for microwave cooking.
- WARNING: If the door or door seals are damaged, the appliance must not be operated until it has been repaired by a qualified person.
- WARNING: Only a qualified person can carry out any service or repair operation that involves the removal of a cover which gives protection against exposure to microwave energy.
- WARNING: Do not heat liquids and other foods in sealed containers. They are liable to explode.
- Use only utensils that are suitable for use in microwave ovens.
- When heating food in plastic or paper containers, observe the appliance due to the possibility of ignition.
- The appliance is intended for heating food and beverages. Drying of food or clothing and heating of warming pads,

slippers, sponges, damp cloth and similar may lead to risk of injury, ignition or fire.
- If smoke is emitted, switch off or unplug the appliance and keep the door closed in order to stifle any flames.
- Microwave heating of beverages can result in delayed eruptive boiling. Care must be taken when handling the container.
- The contents of feeding bottles and baby food jars shall be stirred or shaken and the temperature checked before consumption, in order to avoid burns.
- Eggs in their shell and whole hard-boiled eggs should not be heated in the appliance since they may explode, even after microwave heating has ended.
- The appliance should be cleaned regularly and any food deposits removed.
- Failure to maintain the appliance in a clean condition could lead to deterioration of the surface that could adversely affect the life of the appliance and possibly result in a hazardous situation.

SAFETY INSTRUCTIONS

INSTALLATION

WARNING! Only a qualified person must install this appliance.

- Remove all the packaging.
- Do not install or use a damaged appliance.
- Follow the installation instructions supplied with the appliance.
- Always take care when moving the appliance as it is heavy. Always use safety gloves and enclosed footwear.
- Do not pull the appliance by the handle.
- Install the appliance in a safe and suitable place that meets installation requirements.
- Keep the minimum distance from other appliances and units.
- Before mounting the appliance, check if the oven door opens without restraint.
- The appliance is equipped with an electric cooling system. It must be operated with the electric power supply.
- The built-in unit must meet the stability requirements of DIN 68930.

Cabinet minimum height (Cabinet under the worktop minimum height)	444 (460) mm
Cabinet width	560 mm
Cabinet depth	550 (550) mm
Height of the front of the appliance	455 mm
Height of the back of the appliance	440 mm
Width of the front of the appliance	595 mm
Width of the back of the appliance	559 mm
Depth of the appliance	567 mm
Built in depth of the appliance	546 mm
Depth with open door	882 mm

Ventilation opening minimum size. Opening placed on the bottom rear side	560x20 mm
Mains supply cable length. Cable is placed in the right corner of the back side	1500 mm
Mounting screws	3.5x25 mm

ELECTRICAL CONNECTION

WARNING! Risk of fire and electric shock.

- All electrical connections should be made by a qualified electrician.
- The appliance must be earthed.
- Make sure that the parameters on the rating plate are compatible with the electrical ratings of the mains power supply.
- Always use a correctly installed shockproof socket.
- Do not use multi-plug adapters and extension cables.
- Make sure not to cause damage to the mains plug and to the mains cable. Should the mains cable need to be replaced, this must be carried out by our Authorised Service Centre.
- Do not let mains cables touch or come near the appliance door or the niche below the appliance, especially when it operates or the door is hot.
- The shock protection of live and insulated parts must be fastened in such a way that it cannot be removed without tools.
- Connect the mains plug to the mains socket only at the end of the installation. Make sure that there is access to the mains plug after the installation.
- If the mains socket is loose, do not connect the mains plug.
- Do not pull the mains cable to disconnect the appliance. Always pull the mains plug.
- Use only correct isolation devices: line protecting cut-outs, fuses (screw type fuses removed from the holder), earth leakage trips and contactors.
- The electrical installation must have an isolation device which lets you disconnect the appliance from the mains at all poles. The isolation device must have a contact opening width of minimum 3 mm.
- This appliance is supplied only with a main cable.

USE

WARNING! Risk of injury, burns and electric shock or explosion.

- This appliance is for household use only.
- Do not change the specification of this appliance.
- Make sure that the ventilation openings are not blocked.
- Do not let the appliance stay unattended during operation.
- Deactivate the appliance after each use.
- Be careful when you open the appliance door while the appliance is in operation. Hot air can release.
- Do not operate the appliance with wet hands or when it has contact with water.
- Do not apply pressure on the open door.
- Do not use the appliance as a work surface or as a storage surface.
- Open the appliance door carefully. The use of ingredients with alcohol can cause a mixture of alcohol and air.
- Do not let sparks or open flames to come in contact with the appliance when you open the door.
- Do not put flammable products or items that are wet with flammable products in, near or on the appliance.
- Do not use microwave function to preheat the oven.

WARNING! Risk of damage to the appliance.

- To prevent damage or discoloration to the enamel:
  - do not put aluminium foil directly on the bottom of cavity of the appliance.
  - do not put water directly into the hot appliance.
  - do not keep moist dishes and food in the appliance after you finish the cooking.
  - be careful when you remove or install the accessories.
- Discoloration of the enamel or stainless steel has no effect on the performance of the appliance.
- Use a deep pan for moist cakes. Fruit juices cause stains that can be permanent.
- This appliance is for cooking purposes only. It must not be used for other purposes, for example room heating.
- Always cook with the oven door closed.
- If the appliance is installed behind a furniture panel (e.g. a door) make sure the door is never closed when the appliance operates. Heat and

moisture can build up behind a closed furniture panel and cause subsequent damage to the appliance, the housing unit or the floor. Do not close the furniture panel until the appliance has cooled down completely after use.

CARE AND CLEANING

WARNING! Risk of injury, fire, or damage to the appliance.

- Before maintenance, deactivate the appliance and disconnect the mains plug from the mains socket.
- Make sure the appliance is cold. There is the risk that the glass panels can break.
- Replace immediately the door glass panels when they are damaged. Contact the Authorised Service Centre.
- Be careful when you remove the door from the appliance. The door is heavy!
- Make sure the cavity and the door are wiped dry after each use. Steam produced during the operation of the appliance condensates on cavity walls and can cause corrosion.
- Clean regularly the appliance to prevent the deterioration of the surface material.
- Fat and food remaining in the appliance can cause fire and electric arcing when the microwave function operates.
- Clean the appliance with a moist soft cloth. Use only neutral detergents. Do not use abrasive products, abrasive cleaning pads, solvents or metal objects.
- If you use an oven spray, follow the safety instructions on its packaging.

INTERNAL LIGHTING

WARNING! Risk of electric shock.

- The type of light bulb or halogen lamp used for this appliance is for household appliances only. Do not use it for house lighting.
- Before replacing the lamp, disconnect the appliance from the power supply.
- Use only lamps with the same specifications.

SERVICE

- To repair the appliance contact the Authorised Service Centre.
- Use original spare parts only.

DISPOSAL

WARNING! Risk of injury or suffocation.

- Disconnect the appliance from the mains supply.
- Cut off the mains electrical cable close to the appliance and dispose of it.
- Remove the door catch to prevent children or pets from becoming trapped in the appliance.

PRODUCT DESCRIPTION

GENERAL OVERVIEW

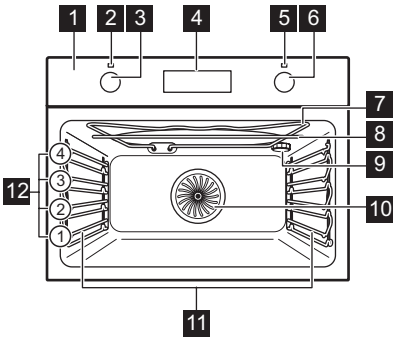

1. Control panel
2. Power lamp / symbol
3. Knob for the heating functions
4. Display
5. Temperature and microwave power indicator / symbol
6. Control knob
7. Heating element
8. Microwave generator
9. Lamp
10. Fan
11. Shelf support, removable
12. Shelf positions

ACCESSORIES

Wire shelf

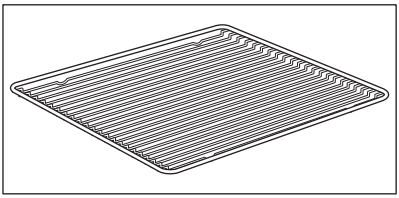

For cookware, cake tins, roasts.

Grill- / Roasting pan

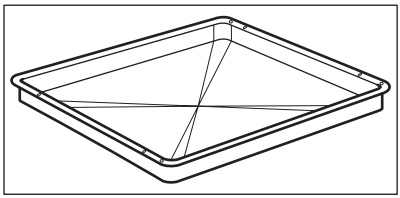

To bake and roast or as a pan to collect fat.

CONTROL PANEL

BUTTONS

Sensor field / Button	Description
start	To set the microwave function. Hold it for more than 3 seconds to turn on or turn off the oven lamp. You can turn on the light also when the oven is turned off.
	To set a clock function.
°C	To check the oven temperature or the temperature of the core temperature sensor (if applicable). Use only while the heating function operates.

DISPLAY

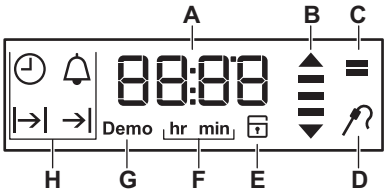

A. Timer / Temperature / Microwave power
B. Heat-up and residual heat indicator
C. Microwave mode
D. Food Sensor (selected models only)
E. Door lock (selected models only)
F. Hours / minutes
G. Demo Mode
H. Clock functions

BEFORE FIRST USE

WARNING! Refer to Safety chapters.

To set the Time of day refer to "Clock functions" chapter.

INITIAL CLEANING

Step 1	Step 2	Step 3
Remove all accessories and removable shelf supports from the oven.	Clean the oven and the accessories with a soft cloth, warm water and a mild detergent.	Place the accessories and the removable shelf supports in the oven.

DAILY USE

WARNING! Refer to Safety chapters.

RETRACTABLE KNOBS

To use the appliance press the knob. The knob comes out.

HEATING FUNCTIONS

Oven function	Application
0 Off position	The oven is off.
Fast Heat Up	To decrease the heat-up time.
Microwave	Creates the heat directly in the food. Use it to heat pre-prepared meals and drinks, to defrost meat or fruit, and to cook vegetables and fish.
True Fan Cooking	To bake on up to two shelf positions at the same time and to dry food. Set the temperature 20 - 40 °C lower than for Conventional Cooking.
Pizza Function	To bake pizza. To make intensive browning and a crispy bottom.
Conventional Cooking	To bake and roast food on one shelf position.
Bottom Heat	To bake cakes with crispy bottom and to preserve food.
Defrost	To defrost food (vegetables and fruit). The defrosting time depends on the amount and size of the frozen food.
Grill	To grill thin pieces of food and to toast bread.
Turbo Grilling	To roast large meat joints or poultry with bones on one shelf position. To make gratins and to brown.

The lamp may turn off automatically at a temperature below 60 °C during some oven functions.

SETTING A HEATING FUNCTION

1. Turn the knob for the heating functions to select a heating function.
2. Turn the control knob to select the temperature / the microwave power.

The lamp turns on when the oven operates.

3. To turn off the oven, turn the knob for the heating functions to the off position.

SETTING MICROWAVE FUNCTION

1. Remove all accessories.
2. Turn the knob for the heating functions to select the function: Microwave

Do not let the oven operate when there is no food in it.

First, the display shows the default setting for microwave power and then the default setting for: Duration.

Press start to start with the default settings.

3. Turn the control knob to change the microwave power. The power setting changes in 100 W steps.
4. Press and then turn the control knob to change: Duration. Press again and again to switch between the settings for: Duration and microwave power. Turn the control knob to set the value and press start to confirm.
5. Press start.

The signal sounds and the oven stops when cooking time ends.

6. Turn the knob for the heating functions to the off position to turn off the oven.

When you open the oven door, the oven stops. To start it again, close the door and press start.

The maximum time of microwave functions depends on microwave power you set:

MICROWAVE POWER	MAXIMUM TIME
100 - 600 W	-
More than 600 W	7 minutes

SETTING FUNCTION: MICROWAVE COMBI

You can combine the microwave function with any of the heating functions.

1. Turn the knob for the heating functions to select the function.

The display shows the default temperature.

2. Turn the control knob to change the temperature.
3. Press start to combine heating function with the microwave mode.
4. Turn the control knob to change the microwave power settings. The power setting changes in 100 W steps.

Around 5 degrees before the set temperature is reached the signal sounds. When the set time ends the signal sounds again and the oven stops.

5. Turn the knob for the heating functions to the off position.
   Microwave power is limited to 600 W when you use the function: Microwave Combi.
   The oven can make noises when using the function: Microwave Combi. They are normal for this function.

HEAT-UP INDICATOR

When the oven function operates, the bars in the display appear one by one when the temperature in the oven increases, and disappear when it decreases.

CLOCK FUNCTIONS

CLOCK FUNCTIONS TABLE

Clock function	Application
Time of Day	To show or change the time of day. You can change the time of day only when the oven is off.
Duration	To set the length of cooking. Use only when a heating function is set.
End Time	To set the oven turn-off time. Use only when a heating function is set.
Time Delay	Combination of functions: Duration, End Time.
Minute Minder	To set a countdown time. This function has no effect on the operation of the oven. Minute Minder - can be set at any time, also if the oven is off.

HOW TO SET: TIME OF DAY

After the first connection to the mains, wait until the display shows: **hr**, **12:00**. **12** - flashes.

Step 1	Turn the knob for the temperature to set the hour.
Step 2	- press to confirm. The display shows the set hour and: **min**. **00** - flashes.
Step 3	Turn the knob for the temperature to set the minutes.
Step 4	- press to confirm. The display shows the set time.

- press repeatedly to change the time of day. - flashes in the display.

HOW TO SET FUNCTION: DURATION

Step 1	Set a heating function.
Step 2	- press repeatedly. - starts to flash.
Step 3	Turn the control knob to set the minutes. - press to confirm.
Step 4	Turn the knob for the temperature to set the hour. - press to confirm. When the set time ends the signal sounds for 2 min. Time setting flashes in the display. The oven turns off automatically.
Step 5	Press any button to stop the signal.
Step 6	Turn the knob for the heating functions to the off position.

HOW TO SET FUNCTION: END TIME

Step 1	Set a heating function.
Step 2	- press repeatedly. - starts to flash.
Step 3	Turn the knob for the temperature to set the hour. - press to confirm.
Step 4	Turn the knob for the temperature to set the minutes. - press to confirm. At the set end time the signal sounds for 2 min. The time setting flashes in the display. The oven turns off automatically.
Step 5	Press any button to stop the signal.
Step 6	Turn the knob for the heating functions to the off position.

HOW TO SET FUNCTION: TIME DELAY

Step 1	Set a heating function.
Step 2	- press repeatedly. - starts to flash.

Step 3	Turn the knob for the temperature to set the minutes for the function: Duration. Press: ⏲.
Step 4	Turn the knob for the temperature to set the hour for the function: Duration. Press: ⏲. The display shows: →|.
Step 5	Turn the knob for the temperature to set the hour for the function: End Time. Press: ⏲.
Step 6	Turn the knob for the temperature to set the minutes for the function: End Time. Press: ⏲. The display shows: the set temperature, |→|, →|. Oven turns on automatically later on, works for the set Duration time and stops at the set End Time. At the set End Time the signal sounds for 2 min. The time setting flashes in the display. The oven turns off.
Step 7	Press any button to stop the signal.
Step 8	Turn the knob for the heating functions to the off position.

HOW TO SET FUNCTION: MINUTE MINDER

Minute minder can be both set when the oven is turned on and off.

Step 1	⏲ - press repeatedly. 🔔 - flashes.
Step 2	Turn the control knob for the temperature to set the seconds and than the minutes. When the time you set is longer than 60 min, **hr** flashes in the display.
Step 3	Set the hours. Minute Minder - starts automatically after 5 sec. After 90% of the set time the signal sounds.
Step 4	When the set time ends the signal sounds for 2 min. **00:00**, 🔔 - flash in the display. Press any button to stop the signal.

USING THE ACCESSORIES

⚠ **WARNING!** Refer to Safety chapters.

INSERTING ACCESSORIES

Use only suitable cookware and material. Refer to "Hints and tips" chapter, Microwave suitable cookware and materials.

A small indentation at the top increases safety. The indentations are also anti-tip devices. The high rim around the shelf prevents cookware from slipping of the shelf.

Wire shelf:
Push the shelf between the guide bars of the shelf support and make sure that the feet point down.

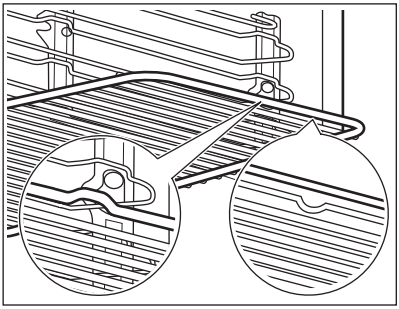

Deep pan:
Push the deep pan between the guide bars of the shelf support.

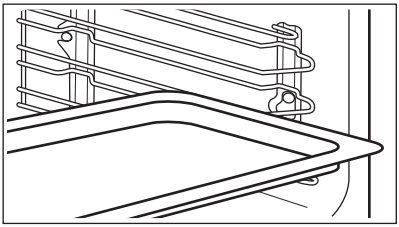

Wire shelf and deep pan together:
Push the deep pan between the guide bars of the shelf support and the wire shelf on the guide bars above.

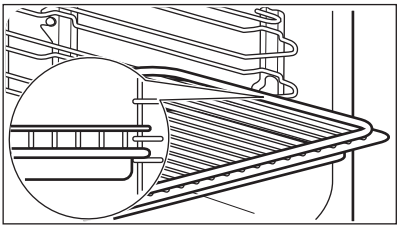

ADDITIONAL FUNCTIONS

USING CHILD LOCK

When the Child lock is on the oven cannot be turned on accidentally.

1. Ensure the knob for the heating functions is in the off position.
2. ⏲, °C - press and hold at the same time for 2 seconds.

The signal sounds. SAFE - appears on the display.

To turn off the Child Lock, repeat the step 2.

USING FUNCTION LOCK

You can turn on the Function Lock function only when the oven works.

When the Function lock is on the temperature and time settings cannot be changed accidentally.

1. Select an oven function and set it according your preferences.
2. Press and hold ⏲ and °C at the same time for 2 seconds.

The signal sounds. **Loc** appears on the display for 5 seconds.

Loc appears on the display when you turn the knob for the temperature or press any button when the Function lock is on.

When you turn the knob for the oven functions, the oven stops.

When you turn off the oven while the Function Lock is on, the Function Lock switches automatically to the Child Lock. Refer to "Additional functions" chapter, Using the Child Lock.

To turn off the Function Lock, repeat step 2.

RESIDUAL HEAT INDICATOR

When you turn off the oven, the display shows the residual heat indicator if the temperature in the oven is more than 40 °C.Turn the knob for the temperature left or right to check the oven temperature.

AUTOMATIC SWITCH-OFF

For safety reasons the oven turns off after some time, if a heating function works and you do not change any settings.

(°C)	(h)
30 - 115	12.5

(°C)	(h)
120 - 195	8.5
200 - 230	5.5

The Automatic switch-off does not work with the functions: Light, Duration, End Time.

COOLING FAN

When the oven operates, the cooling fan turns on automatically to keep the surfaces of the oven cool. If you turn off the oven, the cooling fan can continue to operate until the oven cools down.

HINTS AND TIPS

WARNING! Refer to Safety chapters.

The temperature and cooking times in the tables are guidelines only. They depend on the recipes and the quality and quantity of the ingredients used.

COOKING RECOMMENDATIONS

The temperature and cooking times in the tables are guidelines only. They depend on the recipes and the quality and quantity of the ingredients used.
Your oven may bake or roast differently to the oven you had before. The tables below show recommended settings for temperature, cooking time and shelf position for specific types of the food.
If you cannot find the settings for a special recipe, look for the similar one.

MICROWAVE RECOMMENDATIONS

Let's cook!

Place the food on a plate on the bottom of the cavity.
Turn or stir the food halfway through the defrosting and cooking time.
Stir liquid dishes from time to time.
Stir the food before serving.
Cover the food for cooking and reheating.
Put the spoon to the bottle or glass when heating drinks to ensure better heat distribution.
Put the food into the oven without packaging. The packaged ready meals can be put into the oven only when the packaging is microwave safe (check information on the packaging).

Microwave cooking	Microwave defrosting
Cook food covered. If you want to keep a crust cook food without a cover. Do not overcook the dishes by setting the power and time too high. The food can dry out, burn or cause fire. Do not use the oven to cook eggs or snails in their shells, because they can burst. Pierce the yolk of fried egg before reheating it. Pierce food with skin or peel several times before cooking. Cut vegetables into similar-sized pieces. After you turn off the oven, take the food out and let it stand for a few minutes.	Put the frozen, unwrapped food on a small upturned plate with a container below it, or on a defrosting rack or plastic sieve so that the defrosting liquid can leak out. Remove defrosted pieces subsequently. To cook fruit and vegetables without defrosting them first, you can use a higher microwave power.

MICROWAVE SUITABLE COOKWARE AND MATERIALS

For the microwave use only suitable cookware and materials. Use below table as a reference.

Check the cookware / material specification before use.

Cookware / Material	Microwave function		Microwave Combi function
	Defrosting	Heating, Cooking	
Ovenproof glass and porcelain with no metal components, e.g. heat-proof glass	✓	✓	✓
Non-ovenproof glass and porcelain without any silver, gold, platinum or other metal decorations	✓	X	X
Glass and glass ceramic made of ovenproof / frost-proof material	✓	✓	✓
Ceramic and earthenware without any quartz or metal components and glazes which contain metal	✓	✓	X
Ceramic, porcelain and earthenware with unglazed bottom or with small holes, e.g. on handles	X	X	X
Heat-resistant plastic up to 200 °C	✓	✓	X
Cardboard, paper	✓	X	X
Clingfilm	✓	X	X

Cookware / Material	Microwave function		Microwave Combi function
	Defrosting	Heating, Cooking	
Roasting film with microwave safe closure	✓	✓	X
Roasting dishes made of metal, e.g. enamel, cast iron	X	X	✓
Baking tins, black lacquer or silicon-coated	X	X	✓
Wire shelf	X	X	✓
Cookware for microwave use, e.g. crisp pan	X	✓	X

BAKING

For the first baking, use the lower temperature.

You can extend the baking time by 10 – 15 minutes if you bake cakes on more than one shelf position.

Cakes and pastries at different heights do not always brown equally. There is no need to change the temperature setting if an unequal browning occurs. The differences equalize during baking.

Trays in the oven can distort during baking. When the trays are cold again, the distortions disappear.

TIPS ON BAKING

Baking results	Possible cause	Remedy
The bottom of the cake is not baked sufficiently.	The shelf position is incorrect.	Put the cake on a lower shelf.
The cake sinks and becomes soggy or streaky.	The oven temperature is too high.	Next time set slightly lower oven temperature.
	The oven temperature is too high and the baking time is too short.	Next time set a longer baking time and lower oven temperature.
The cake is too dry.	The oven temperature is too low.	Next time set higher oven temperature.
	The baking time is too long.	Next time set shorter baking time.
The cake bakes unevenly.	The oven temperature is too high and the baking time is too short.	Next time set a longer baking time and lower oven temperature.
	The cake batter is not evenly distributed.	Next time spread the cake batter evenly on the baking tray.

Baking results	Possible cause	Remedy
The cake is not ready in the baking time specified in a recipe.	The oven temperature is too low.	Next time set a slightly higher oven temperature.

BAKING ON ONE OVEN LEVEL

BAKING IN TINS

Use the first shelf position.

Use the function: True Fan Cooking.

	(°C)	(min)
Flan base - short pastry, preheat the empty oven	170 - 180	10 - 25
Flan base - sponge cake mixture	150 - 170	20 - 25
Sponge cake	140 - 150	35 - 50
Ring cake / Brioche	150 - 160	50 - 70
Apple pie, 2 tins Ø20 cm	160	70 - 90
Madeira cake / Fruit cakes	140 - 160	70 - 90

BAKING IN TINS

Use the function: Conventional Cooking.

	(°C)	(min)	
Sponge cake	160	35 - 50	2
Cheesecake, use a deep pan	160 - 170	60 - 90	1
Apple pie, 2 tins Ø20 cm	180	70 - 90	1

CAKES / PASTRIES

Use the first shelf position.

Use the function: True Fan Cooking.

Use the baking tray.

	(°C)	(min)
Cake with crumble topping	150 - 160	20 - 40
Fruit flans (made of yeast dough / sponge cake mixture), use a deep pan	150 - 160	35 - 55
Fruit flans made of short pastry	160 - 170	40 - 80

CAKES / PASTRIES / BREADS

Preheat the empty oven unless specified otherwise.

Use the function: Conventional Cooking.

Use the baking tray.

	(°C)	(min)	
Swiss roll	180 - 200	10 - 20	2
Rye bread	first: 230	first: 20	2
	then: 160 - 180	then: 30 - 60	
Buttered almond cake / Sugar cakes	190 - 210	20 - 30	2
Cream puffs / Eclairs, preheating is not needed	190 - 210	20 - 35	2
Plaited bread / Bread crown, preheating is not needed	170 - 190	30 - 40	2
Fruit flans (made of yeast dough / sponge cake mixture)	170	35 - 55	1
Yeast cakes with delicate toppings (e.g. quark, cream, custard)	160 - 180	40 - 80	2
Christstollen	160 - 180	50 - 70	2

BISCUITS

Use the function: True Fan Cooking.

	(°C)	(min)	
Short pastry biscuits	150 - 160	10 - 20	1
Biscuits made of sponge cake mixture	150 - 160	15 - 20	1
Puff pastries, preheat the empty oven	170 - 180	20 - 30	1
Short bread / Pastry strips	140	20 - 35	1
Small cakes, preheat the empty oven	160	20 - 35	3
Biscuits made of yeast dough	150 - 160	20 - 40	1
Macaroons	100 - 120	30 - 50	1
Pastries made of egg white / Meringues	80 - 100	120 - 150	1

BISCUITS

Preheat the empty oven.

Use the second shelf position.

Use the function: Conventional Cooking.

	(°C)	(min)
Rolls	190 - 210	10 - 25
Short bread / Pastry strips	160	20 - 30
Small cakes	170	20 - 35

BAKES AND GRATINS

Use the first shelf position.

		(°C)	(min)
Baguettes topped with melted cheese	True Fan Cooking	160 - 170	15 - 30
Vegetables au gratin, preheat the empty oven	Turbo Grilling	160 - 170	15 - 30
Lasagne	Conventional Cooking	180 - 200	25 - 40
Fish bakes	Conventional Cooking	180 - 200	30 - 60
Stuffed vegetables	True Fan Cooking	160 - 170	30 - 60

Use the first shelf position.

		(°C)	(min)
Sweet bakes	Conventional Cooking	180 - 200	40 - 60
Pasta bake	Conventional Cooking	180 - 200	45 - 60

MULTILEVEL BAKING

Use the first / third shelf position.

CAKES / PASTRIES / BREADS

True Fan Cooking.

Use the baking trays.

	(°C)	(min)
Cream puffs / Eclairs, preheat the empty oven	160 - 180	25 - 45
Dry streusel cake	150 - 160	30 - 45
Short pastry biscuits	150 - 160	20 - 40
Biscuits made of sponge cake mixture	160 - 170	25 - 40
Short bread / Pastry strips	140	25 - 45
Biscuits made of yeast dough	160 - 170	30 - 60

CAKES / PASTRIES / BREADS

True Fan Cooking.

Use the baking trays.

	(°C)	(min)
Macaroons	100 - 120	40 - 80
Pastries made of egg white / Meringues	80 - 100	130 - 170

TIPS ON ROASTING

Use heat-resistant ovenware.

Roast lean meat covered (you can use aluminium foil).

Roast large meat joints directly in the tray or on the wire shelf placed above the tray.

Put some water in the tray to prevent dripping fat from burning.

Turn the roast after 1/2 - 2/3 of the cooking time.

Roast meat and fish in large pieces (1 kg or more).

Baste meat joints with their own juice several times during roasting.

ROASTING

Use the first shelf position.

BEEF

Use the function: Conventional Cooking.

	(kg)	POWER (W)	(°C)	(min)
Pot roast	1 - 1.5	200	230	60 - 80

PORK

Use the function: Turbo Grilling.

	(kg)	POWER (W)	(°C)	(min)
Shoulder / Neck / Ham joint	1 - 1.5	200	160 - 180	50 - 70
Meatloaf	0.75 - 1	200	160 - 170	35 - 50
Pork knuckle, precooked	0.75 - 1	200	150 - 170	60 - 75

VEAL

Use the function: Turbo Grilling.

	(kg)	POWER (W)	(°C)	(min)
Roast veal	1	200	160 - 180	50 - 70
Veal knuckle	1.5 - 2	200	160 - 180	75 - 100

LAMB

Use the function: Turbo Grilling.

	(kg)	POWER (W)	(°C)	(min)
Lamb leg / Roast lamb	1 - 1.5	200	150 - 170	50 - 70

POULTRY

Use the function: Turbo Grilling.

	(kg)	POWER (W)	(°C)	(min)
Poultry, portions	0.2 - 0.25 each	200	200 - 220	20 - 35
Chicken, half	0.4 - 0.5 each	200	190 - 210	25 - 40
Chicken, poulard	1 - 1.5	200	190 - 210	60 - 80
Duck	1.5 - 2	200	180 - 200	80 - 110

FISH

Use the function: Conventional Cooking.

	(kg)	POWER (W)	(°C)	(min)
Whole fish	1 - 1.5	200	210 - 220	30 - 45

DISHES

Use the function: True Fan Cooking.

	(kg)	POWER (W)	(°C)	(min)
Sweet dishes	200	160 - 180	20 - 35	1
Savoury dishes with cooked ingredients (noodles, vegetables)	400 - 600	160 - 180	20 - 45	1
Savoury dishes with raw ingredients (potatoes, vegetables)	400 - 600	160 - 180	30 - 45	2

CRISPY BAKING WITH PIZZA FUNCTION

PIZZA

Preheat the empty oven before cooking.

Use the third shelf position.

	(°C)	(min)
Pizza, thin crust	200 - 230	15 - 20
Pizza, thick crust, use a deep pan	180 - 200	20 - 30

PIZZA

Preheat the empty oven before cooking.

Use the third shelf position.

	(°C)	(min)
Tarts	180 - 200	40 - 55
Spinach flan	160 - 180	45 - 60
Quiche lorraine / Swiss flan	170 - 190	45 - 55

PIZZA

Preheat the empty oven before cooking.

Use the third shelf position.

	(°C)	(min)
Cheesecake	140 - 160	60 - 90
Apple pie, covered	150 - 170	50 - 60
Vegetable pie	160 - 180	50 - 60
Unleavened bread	230	10 - 20

PIZZA

Preheat the empty oven before cooking.

Use the third shelf position.

	(°C)	(min)
Puff pastry flan	160 - 180	45 - 55
Flammkuchen	230	12 - 20
Pierogi	180 - 200	15 - 25

GRILL

Grill only thin pieces of meat or fish.

Use the first shelf position.

GRILL **Preheat the empty oven before cooking.Use the function: Grill. Put a pan on the first shelf position to collect fat.**	(°C)	(min)	(min)
		1st side	**2nd side**
Roast beef, medium	210 - 230	30 - 40	30 - 40
Beef fillet, medium	230	20 - 30	20 - 30
Pork loin	210 - 230	30 - 40	30 - 40
Veal loin	210 - 230	30 - 40	30 - 40
Lamb saddle	210 - 230	25 - 35	20 - 35
Whole fish, 0.5 kg - 1 kg	210 - 230	15 - 30	15 - 30

BREAD BAKING

Preheating is not recommended.

Use the second shelf position.

BREAD	(°C)	(min)
White bread	180 - 200	40 - 60
Baguette	200 - 220	35 - 45
Brioche	160 - 180	40 - 60
Ciabatta	200 - 220	35 - 45
Rye bread	180 - 200	50 - 70
Wholemeal bread	180 - 200	50 - 70
Whole grain bread	170 - 190	60 - 90

FROZEN FOODS

Remove the food packaging. Put the food on a plate.

Do not cover the food, as this can extend the defrost time.

DEFROSTING

Use the third shelf position unless specified otherwise.

Use the function: True Fan Cooking.

	(°C)	(min)
Pizza, frozen	200 - 220	15 - 25
Pizza American, frozen	190 - 210	20 - 25
Pizza, chilled	210 - 230	13 - 25
Pizza snacks, frozen	180 - 200	15 - 30
French fries, thin, turn 2 or 3 times during cooking	210 - 230	20 - 30
French fries, thick, turn 2 or 3 times during cooking	210 - 230	25 - 35
Wedges / Croquettes, turn 2 or 3 times during cooking	210 - 230	20 - 35
Hash browns	210 - 230	20 - 30
Lasagne / Cannelloni, fresh, use the second shelf position	170 - 190	35 - 45
Lasagne / Cannelloni, frozen, use the second shelf position	160 - 180	40 - 60
Chicken wings	190 - 210	20 - 30

DEFROST

Remove the food packaging and put the food on a plate.

Do not cover the food, as this can extend the defrost time.

For large portions of food place an upturned empty plate on the bottom of the oven cavity. Put the food in a deep dish and set it on top of the plate inside the oven. Remove the shelf supports if necessary.

Use the first shelf position.

	(kg)	(min) Defrosting time	(min) Further defrosting time	
Chicken	1	100 - 140	20 - 30	Turn halfway through.
Meat, turn half-way through	1	100 - 140	20 - 30	Turn halfway through.
Trout	0.15	25 - 35	10 - 15	-
Strawberries	0.3	30 - 40	10 - 20	-
Butter	0.25	30 - 40	10 - 15	-
Cream, whip the cream when still slightly frozen in places	2 x 0.2	80 - 100	10 - 15	Whip the cream when still slightly frozen in places.
Gateau	1.4	60	60	-

PRESERVING

Use the function Bottom Heat.

Use only preserve jars of the same dimensions available on the market.

Do not use jars with twist-off and bayonet type lids or metal tins.

Use the first shelf position.

Put no more than six one-litre preserve jars on the baking tray.

Fill the jars equally and close with a clamp.

The jars cannot touch each other.

Put approximately 1/2 litre of water into the baking tray to give sufficient moisture in the oven.

When the liquid in the jars starts to simmer (after approximately 35 - 60 minutes with one-litre jars), stop the oven or decrease the temperature to 100 °C (see the table).

Set the temperature to 160 - 170 °C.

SOFT FRUIT	(min) Cooking time until simmering
Strawberries / Blue-berries / Raspberries / Ripe gooseberries	35 - 45

STONE FRUIT	(min) Cooking time until simmering	(min) Continue to cook at 100 °C
Peaches / Quinces / Plums	35 - 45	10 - 15

VEGETABLES	(min) Cooking time until simmering	(min) Continue to cook at 100 °C
Carrots	50 - 60	5 - 10
Cucumbers	50 - 60	-
Mixed pickles	50 - 60	5 - 10
Kohlrabi / Peas / Asparagus	50 - 60	15 - 20

DEHYDRATING - TRUE FAN COOKING

Use the third shelf position.

	(°C)	(h)
Beans	60 - 70	6 - 8
Peppers	60 - 70	5 - 6
Vegetables for soup	60 - 70	5 - 6
Mushrooms	50 - 60	6 - 8
Herbs	40 - 50	2 - 3
Plums	60 - 70	8 - 10
Apricots	60 - 70	8 - 10
Apple slices	60 - 70	6 - 8
Pears	60 - 70	6 - 9

MICROWAVE COOKING

Tips for Microwave

Cooking / Defrosting results	Possible cause	Remedy
The food is too dry.	Power was too high. Cooking time was too long.	Set lower power or/and shorter cooking time.
The food is not defrosted, cold or underdone after cooking time ends.	Cooking time was too short.	Set longer cooking time. Do not increase microwave power.
The food is overheated at the edges, but underdone in the middle.	Microwave power was too high.	Set lower power and longer cooking time.

DEFROSTING

MEAT / FISH Set power for 100 W unless specified otherwise.	(kg)	(min)	Standing time (min)
Steak	0.2	5 - 7	5 - 10
Minced meat, set 200 W	0.5	7 - 8	5 - 10
Chicken	1	30 - 35	10 - 20
Chicken breast	0.15	5 - 9	10 - 15
Chicken legs	0.15	5 - 9	10 - 15
Whole fish	0.5	10 - 15	5 - 10
Fish fillet	0.5	12 - 15	5 - 10

DAIRY PRODUCTS Set power for 100 W.	(kg)	(min)	Standing time (min)
Butter	0.25	4 - 6	5 - 10
Grated cheese	0.2	2 - 4	10 - 15

CAKES AND BREAD Set power for 200 W unless specified otherwise.		(min)	Standing time (min)
Yeast cake	1 piece	2 - 3	15 - 20
Cheesecake, set 100 W	1 piece	2 - 4	15 - 20
Dry cake	1 piece	2 - 4	15 - 20
Bread	1 kg	15 - 18	5 - 10
Sliced bread	0.2 kg	3 - 5	5 - 10
Bread rolls	4 pieces	2 - 4	2 - 5

FRUIT	(kg)	POWER (W)	(min)	Standing time (min)
Fruit	0.25	100	5 - 10	10 - 15

REHEATING		POWER (W)	(min)	Standing time (min)
Baby food in jars	0.2 kg	300	1 - 2	-
Baby milk, put a spoon into the bottle	180 ml	600	0:20 - 0:40	-
Milk	200 ml	1000	1 - 1:30	-
Water	200 ml	1000	1:30 - 2	-
Sauce	200 ml	600	1 - 3	-
Soup	300 ml	600	3 - 5	-
Ready frozen meals	0.5 kg	400	10 - 15	2 - 5
Convenience food	0.5 kg	600	6 - 9	2 - 5

MELTING	(kg)	POWER (W)	(min)	Standing time (min)
Chocolate / Chocolate icing	0.15	300	2 - 4	1 - 2
Butter	0.1	400	0:30 - 1:30	-

COOKING

		POWER (W)	(min)	Standing time (min)
Whole fish	0.5 kg	500	8 - 10	2 - 5
Fish fillet	0.5 kg	400	4 - 7	2 - 5
Vegetables, fresh	0.5 kg + 50 ml of water	600	5 - 15	-
Vegetables, frozen	0.5 kg + 50 ml of water	600	10 - 20	-
Jacket potatoes	0.5 kg	600	7 - 10	-
Rice	0.2 kg + 400 ml of water	600	15 - 18	-
Popcorn	-	1000	1:30 - 3	-

Microwave Combi function

Set the function: Grill + MW.

	(kg)		POWER (W)	(°C)	(min)	Standing time (min)
Chicken, half, use the second shelf position	0.55 x 2 pieces	Round glass dish, Ø 26 cm	300	220	40	5
Au gratin potatoes, use the second shelf position	1	Round glass dish	300	200	40	10
Roast pork neck, use the first shelf position	1	Glass dish with strainer	300	200	70	10

RECOMMENDED POWER SETTINGS FOR DIFFERENT KINDS OF FOOD

The data in the table is for guidance only.

700 - 1000 W

Cooking vegetables	Searing at the start of the cooking process	Heating liquids

500 - 600 W

Cooking egg dishes	Simmering stews	Heating one-plate meals	Defrosting and heating frozen meals

300 - 400 W

Melting cheese, chocolate, butter	Simmering rice	Heating baby food	Cooking / Heating delicate food	Continuing cooking

100 - 200 W

Defrosting bread	Defrosting fruit and cakes	Defrosting cheese, cream, butter	Defrosting meat, fish

INFORMATION FOR TEST INSTITUTES

Tests according to IEC 60705.

Use wire shelf unless otherwise specified.

MICROWAVE FUNCTION	POWER **(W)**	**(kg)**		**(min)**	
Sponge cake	600	0.475	Bottom	7 - 9	Turn container around by 1/4, halfway through the cooking time.

Use wire shelf unless otherwise specified.

MICROWAVE FUNCTION	POWER (W)	(kg)		(min)	
Meatloaf	400	0.9	2	25 - 32	Turn container around by 1/4, halfway through the cooking time.
Egg custard	500	1	Bottom	18	-
Meat defrosting	200	0.5	Bottom	7 - 8	Turn the meat upside down halfway through the cooking time.

Use the wire shelf.

MICROWAVE COMBI FUNCTION		POWER (W)	(°C)		(min)	
Cake, 0.7 kg	True Fan Cooking + MW	100	180	2	29 - 31	Turn container around by 1/4, halfway through the cooking time.
Potato gratin, 1.1 kg	Grill + MW	400	160	1	40 - 45	Turn container around by 1/4, halfway through the cooking time.
Chicken, 1.1 kg	Grill + MW	400	230	1	45 - 55	Put the meat in round glass container and turn it upside down after 20 minutes of the cooking time.

CARE AND CLEANING

WARNING! Refer to Safety chapters.

NOTES ON CLEANING

Cleaning Agents	Clean the front of the oven with a soft cloth with warm water and a mild detergent.
	Use a cleaning solution to clean metal surfaces.
	Clean stains with a mild detergent.
Everyday Use	Clean the cavity after each use. Fat accumulation or other residue may cause fire. Clean the oven ceiling carefully from residue and fat.
	Dry the cavity with a soft cloth after each use.
Accessories	Clean all accessories after each use and let them dry. Use a soft cloth with warm water and a mild detergent. Do not clean the accessories in a dishwasher.
	Do not clean the non-stick accessories using abrasive cleaner or sharp-edged objects.

HOW TO REMOVE: SHELF SUPPORTS

Remove the shelf supports to clean the oven.

Step 1	Turn off the oven and wait until it is cold.
Step 2	Carefully pull the shelf supports up and out of the front catch.
Step 3	Pull the front end of the shelf support away from the side wall.
Step 4	Pull the supports out of the rear catch.

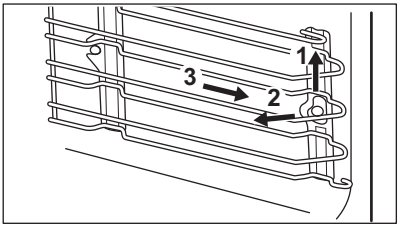

Install the shelf supports in the opposite sequence.

HOW TO REPLACE: LAMP

WARNING! Risk of electric shock.
The lamp can be hot.

Always hold the halogen lamp with a cloth to prevent grease residue from burning on the lamp.

Before you replace the lamp:

Step 1	Step 2	Step 3
Turn off the oven. Wait until the oven is cold.	Disconnect the oven from the mains.	Put a cloth on the bottom of the cavity.

Top lamp

Step 1	Turn the glass cover to remove it.
Step 2	Clean the glass cover.
Step 3	Replace the lamp with a suitable 300 °C heat-resistant lamp.
Step 4	Install the glass cover.

TROUBLESHOOTING

WARNING! Refer to Safety chapters.

WHAT TO DO IF...

Problem	Possible cause	Remedy
You cannot activate or operate the oven.	The oven is not connected to an electrical supply or it is connected incorrectly.	Check if the oven is correctly connected to the electrical supply (refer to the connection diagram if available).
The oven does not heat up.	The oven is deactivated.	Activate the oven.
The oven does not heat up.	The clock is not set.	Set the clock.
The oven does not heat up.	The necessary settings are not set.	Make sure that the settings are correct.
The oven does not heat up.	The automatic switch-off is activated.	Refer to "Automatic switch-off".
The oven does not heat up.	The Child Lock is on.	Refer to "Using the Child Lock".
The oven does not heat up.	The fuse is blown.	Make sure that the fuse is the cause of the malfunction. If the fuse is blown again and again, contact a qualified electrician.
The lamp does not operate.	The lamp is defective.	Replace the lamp.
Steam and condensation settle on the food and in the cavity of the oven.	You left the dish in the oven for too long.	Do not leave the dishes in the oven for longer than 15 - 20 minutes after the cooking process ends.
The display shows an error code that is not in this table.	There is an electrical fault.	▪ Deactivate the oven with the house fuse or the safety switch in the fuse box and activate it again. ▪ If the display shows the error code again, contact the Customer Care Department.

SERVICE DATA

If you cannot find a solution to the problem yourself, contact your dealer or an Authorised Service Centre.

The necessary data for the service centre is on the rating plate. The rating plate is on the front frame of the oven cavity. Do not remove the rating plate from the oven cavity.

We recommend that you write the data here:

Model (MOD.)	.....
Product number (PNC)	.....
Serial number (S.N.)	.....

ENERGY EFFICIENCY

ENERGY SAVING

The oven contains features which help you save energy during everyday cooking.

Make sure that the oven door is closed properly when the oven operates. Do not open the door too often during cooking. Keep the door gasket clean and make sure it is well fixed in its position.

Use metal cookware to improve energy saving (only when you use a non-microwave function).

When possible, do not preheat the oven before cooking.

Keep breaks between baking as short as possible when you prepare a few dishes at one time.

Cooking with fan

When possible, use the cooking functions with fan to save energy.

Residual heat

If a programme with the Duration or End Time selection is activated and the cooking time is longer than 30 minutes, the heating elements automatically turn off earlier in some oven functions.

The fan and lamp continue to operate. When you turn off the oven, the display shows the residual heat. You can use that heat to keep the food warm.

When the cooking duration is longer than 30 minutes, reduce the oven temperature to minimum 3 - 10 minutes before the end of cooking. The residual heat inside the oven will continue to cook.

Use the residual heat to warm up other dishes.

Keep food warm

Choose the lowest possible temperature setting to use residual heat and keep a meal warm. The residual heat indicator or temperature appears on the display.

ENVIRONMENTAL CONCERNS

Recycle materials with the symbol ♲. Put the packaging in relevant containers to recycle it. Help protect the environment and human health by recycling waste of electrical and electronic appliances. Do not dispose of appliances marked with the symbol with the household waste. Return the product to your local recycling facility or contact your municipal office.

WWW.ZANUSSI.COM/SHOP

867361828-A-132020

CE