USER MANUAL

Thank you for choosing Better Bathrooms.
Please read this manual before installing your product
and keep for future reference.

better bathrooms

1160mm Pneumatic Frame & Cistern Product BeBa_27485

- For installation with Flush Plates - BeBa_27401/BeBa_27402(sold separately)
- Toilet pan sold separately

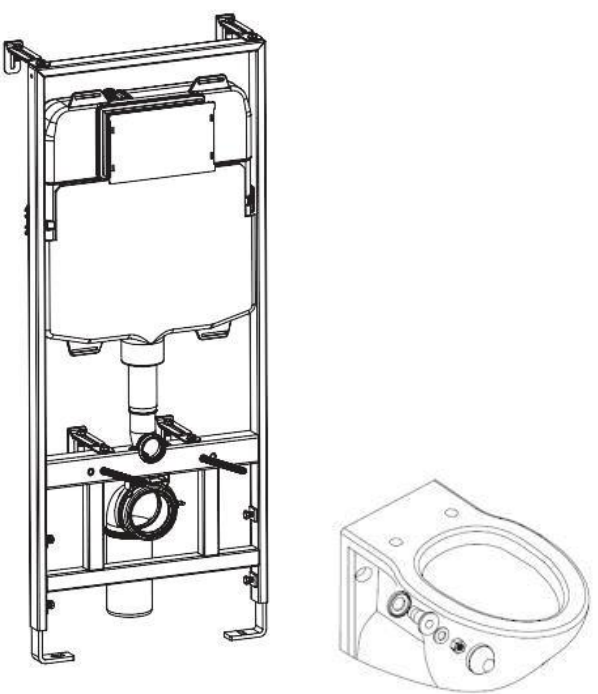

Please note: Image is for illustrative purposes only and may differ slightly to the actual product

- **Multi person assembly**
- **Tools required**
- **We always recommend using professional tradespeople to install your product**

V1 01.6.21

Congratulations on your purchase

And welcome to our growing gang of savvy shoppers

We're on a mission to bring you extraordinary bathroom products, for less. From modern to traditional style ceramics, plus the gorgeous fixtures, fittings and furniture to match. So, you can fall in love with your space every single day.

As one of the UK's largest independent bathroom stores, we've received countless awards; including the National Business Awards UK, the Digital Entrepreneur Awards and being placed on The Sunday Times Fast Track 100.

We hope your new product goes above and beyond your expectations. However, should any problems occur, please:

- log in to your account and contact our customer services team via your self-serve portal – betterbathrooms.com/CustomerAccount/Login
- contact us via betterbathrooms.com/content/contact-us

Important information

- Please read these instructions thoroughly and retain for future reference.
- Manufactured to BS EN14055 WC and urinal cisterns.
- All installation work must be carried out to comply with the Water Bylaw Regulations.
- The installation should be designed to allow access for maintenance.

Contents

- Dimensions 4
- Parts 5-6
- Tools required 6
- Installation
  - o Fitting Pan connector 7
  - o Adjusting Frame Height 8
  - o Securing the Frame 9
  - o Fitting Protective Covers 10
  - o Water Connection 11
  - o Installation once wall is constructed 12-15
  - o Connecting and Hanging the Toilet 16
- Troubleshooting 17
- Maintenance 18-19

Dimensions

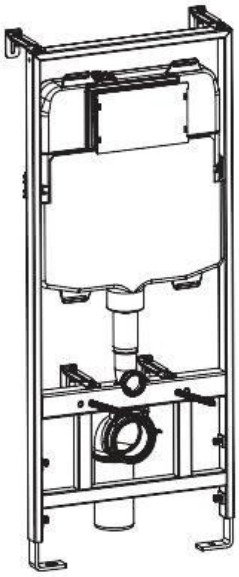

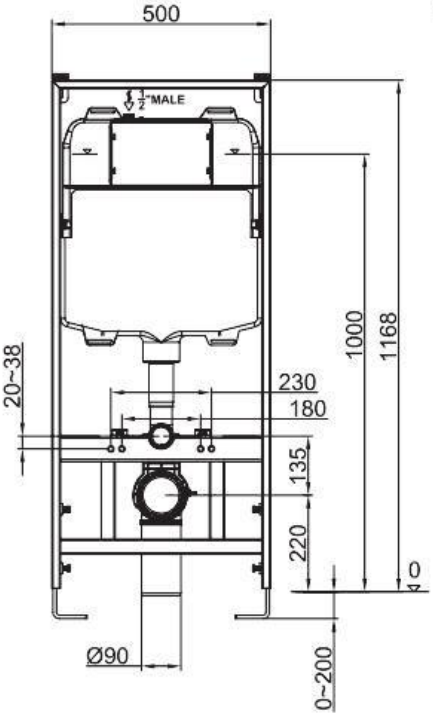
500
1/2"MALE
1000
1168
20~38
230
180
135
220
0
Ø90
0~200

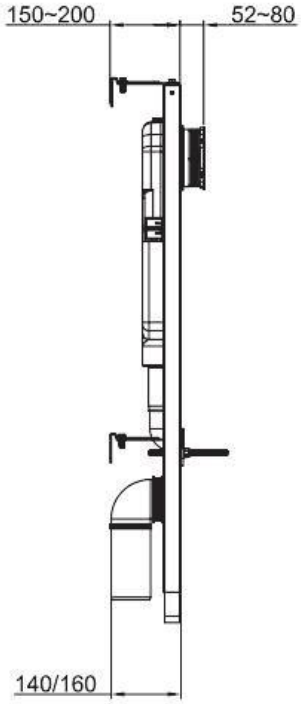
150~200
52~80
140/160

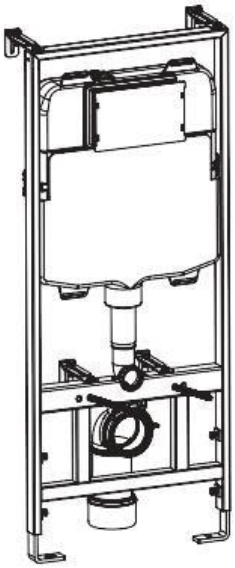

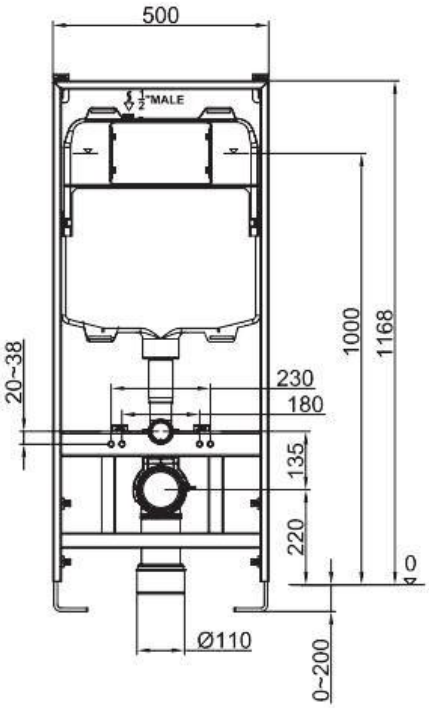
500
1/2"MALE
1000
1168
20~38
230
180
135
220
0
Ø110
0~200

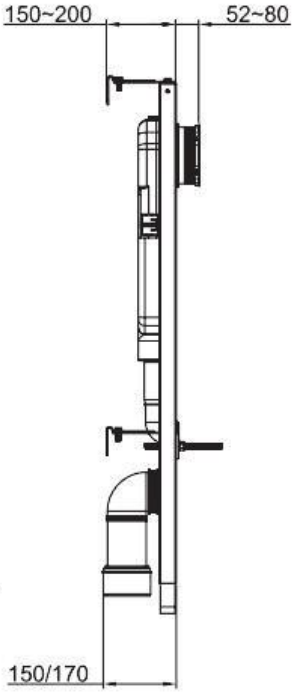
150~200
52~80
150/170

Parts

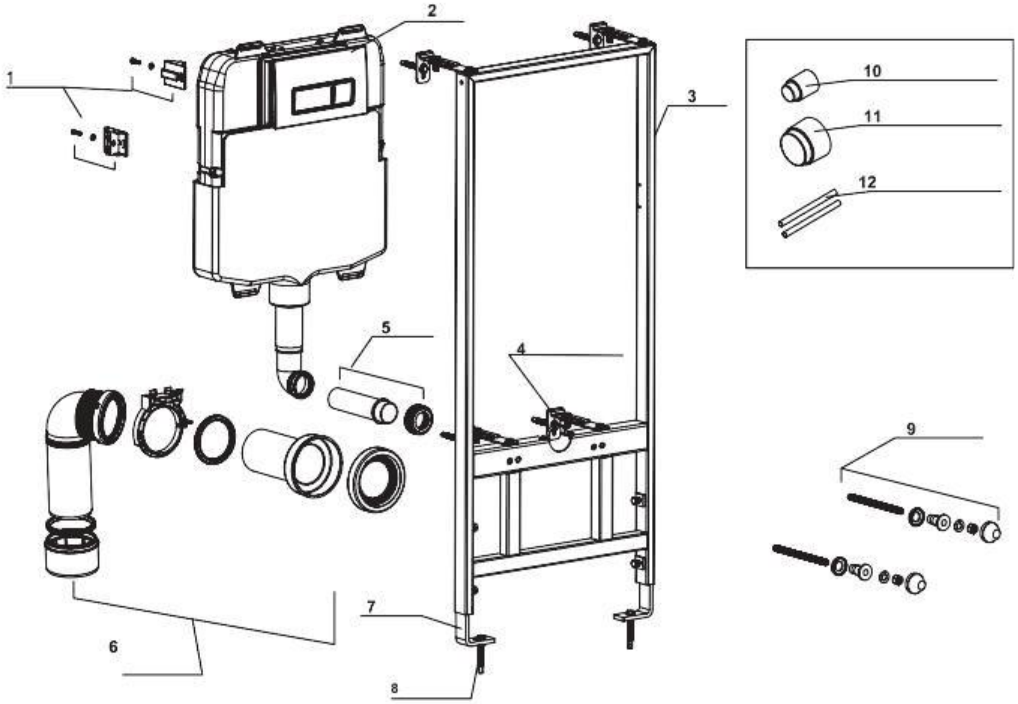

1. Square inlet fixing plate – Pre-fitted
2. Tank
3. Frame
4. Wall fixing brackets and screws
5. Flush pipe and bung
6. Pan connector and seals
7. Adjustable foot
8. Adjustable floor foot fixing screw and plug
9. Toilet fixings
10. Flush pipe protector, use during installation
11. Pan connector protector, use during installation
12. Fixing bar sleeves, use during installation 1

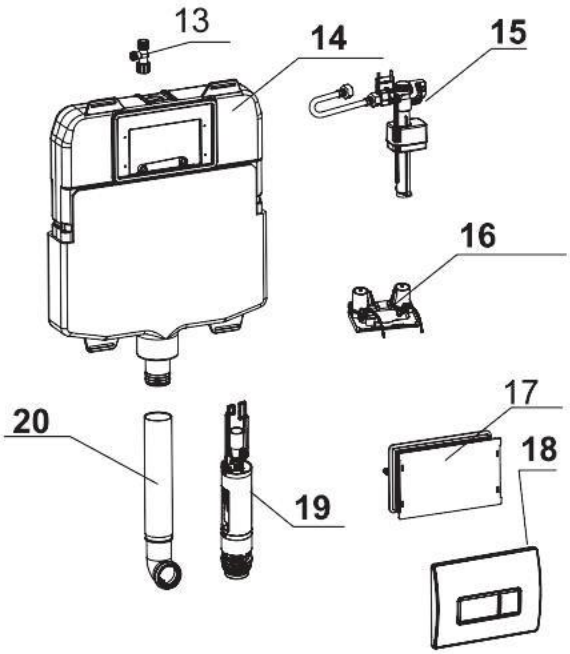

13.Stop Valve – Pre-fitted

14.Cistern

15.Inlet valve

16.Air control plate

17.Flush plate protective cover

18.Flush plate (sold separately)

19.Flush valve

20.Flush pipe vertical

Tools required

- Screwdriver
- Spanner
- Pencil
- Drill
- Sprit Level
- 10mm Drill Bit
- Hacksaw

Installation

Please note:Whenever possible and when safe to do so, it is recommended to carry out leak tests during the installation process

Fitting Pan Connector

If using a straight connector through the wall, you can position as required.

Each option below will give you the minimum dimension from the wall to the front of the fixing foot

Please note: The desired location should be checked before drilling, that no pipes or wires can be damaged

Option 1: Pan connector to be installed into the floor

Position the connector into the frame clip in the position shown below left, located in the rear recess, then close the clip.

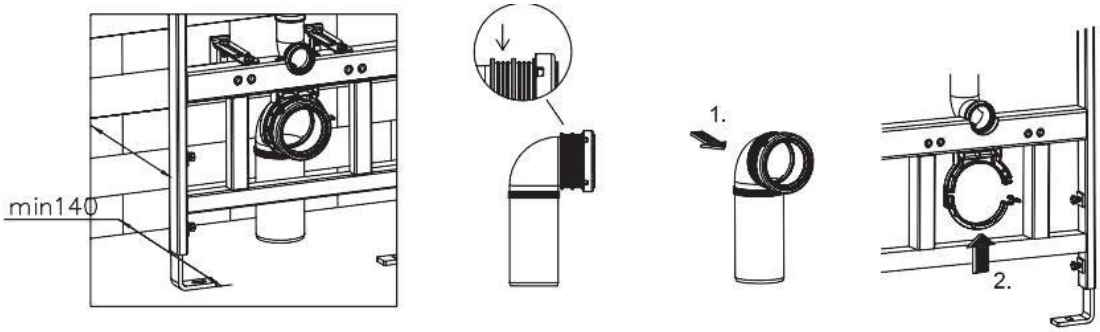

Option 2: Pan connector to be installed to the side

Position the connector into the frame clip in the position shown below left, located in the front recess, then close the clip.

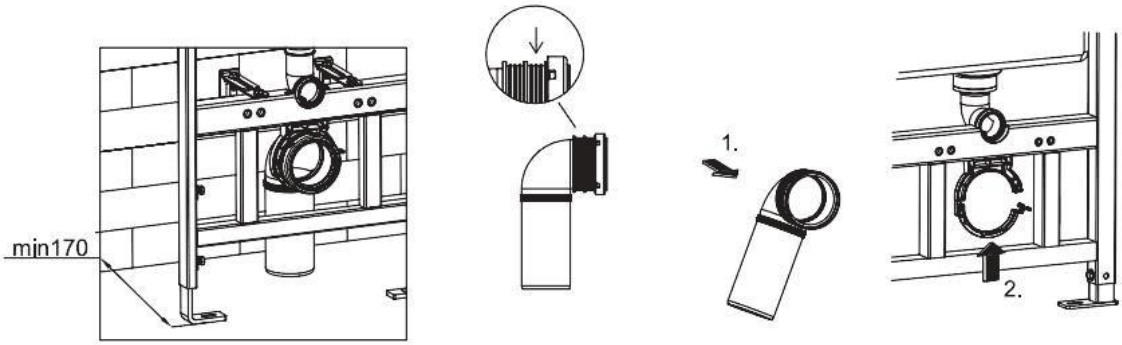

Below show the fixing width dimensions for the wall and floor screws, and the distance from the centre of the pan connector.

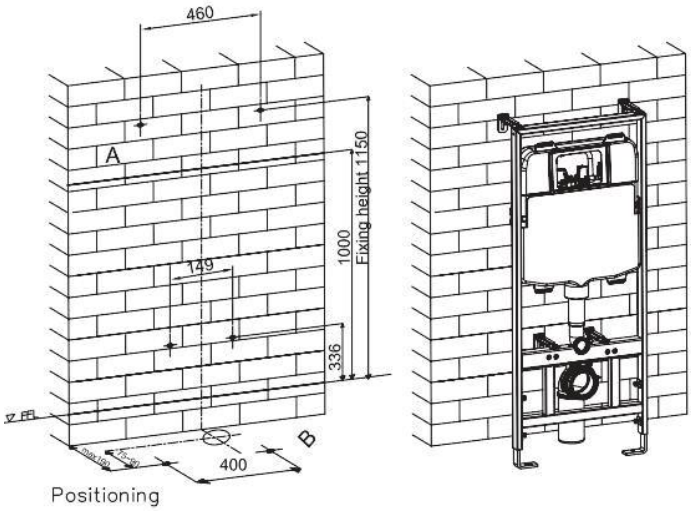

Adjusting Frame Height

Once the pan connector is in place, the height of the frame can be adjusted as required along with the depth of the frame from the wall.

1. To do this loosen the nuts and bolts in the fixing brackets and adjust as required.
2. Check the frame is level and then tighten the nuts and bolts.
3. Once the frame is set to the required height and depth, mark the drill holes on the wall, and on the floor. Now you’re ready to secure the frame.

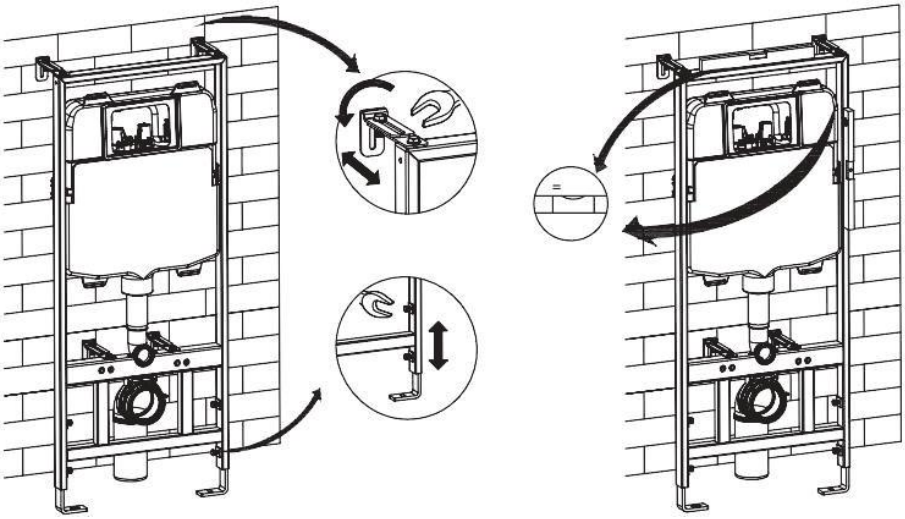

Securing the Frame

1. Drill the holes using a 10mm drill bit; it is recommended to place tape over the drill mark if you are drilling into tiles to prevent any slippage.
2. Once drilled, if fixing to a solid wall and floor, push the wall plug into the hole.
3. Secure the wall bracket to the wall and then position the frame into the required location.
4. Tighten the frame to the wall bracket and tighten the nut and bolt.
5. Secure the foot into position using the screws provided.

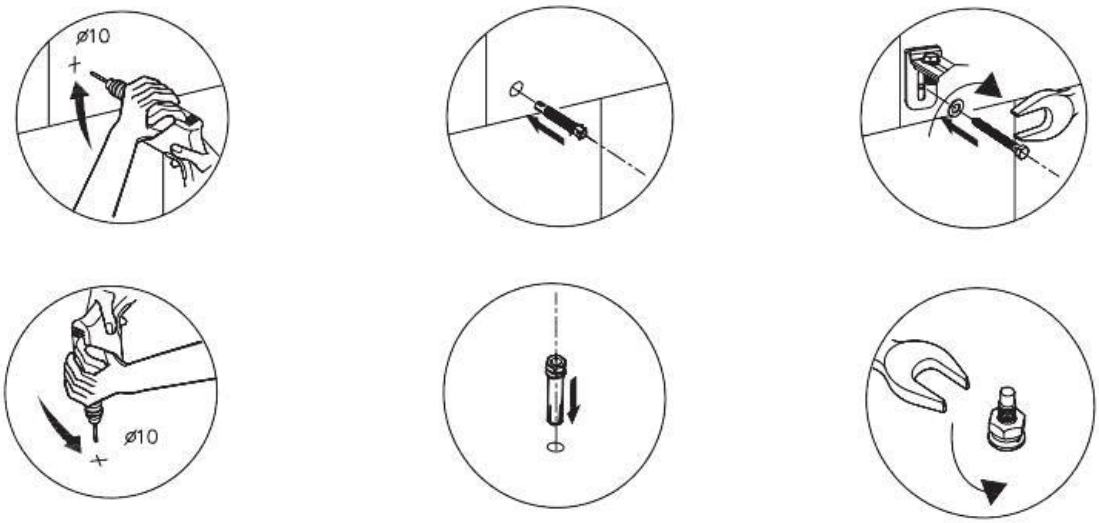

Fitting Protective Covers

Before building the wall, and tiling around the frame, the protective covers need to be fitted to the flush plate housing, flush pipe and pan connector and the fixing bars fixed into place.

1. Fit the flush plate fixing bracket (as below), then fit the flush plate fitting box.

Please note: The Flush Plate is sold separately

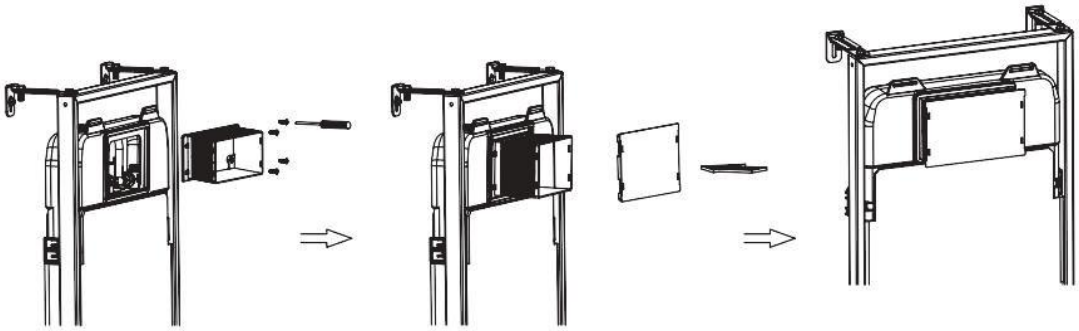

2. Push on the flush pipe and pan connector covers.

3. Screw the threaded bars into the frame, as below, ensuring these are in the correct hole to match the holes in the toilet, then push on the sleeves

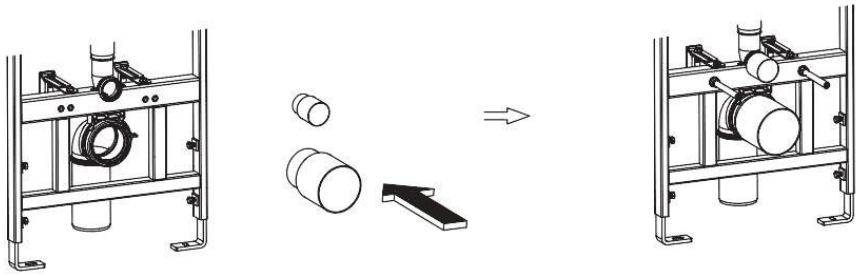

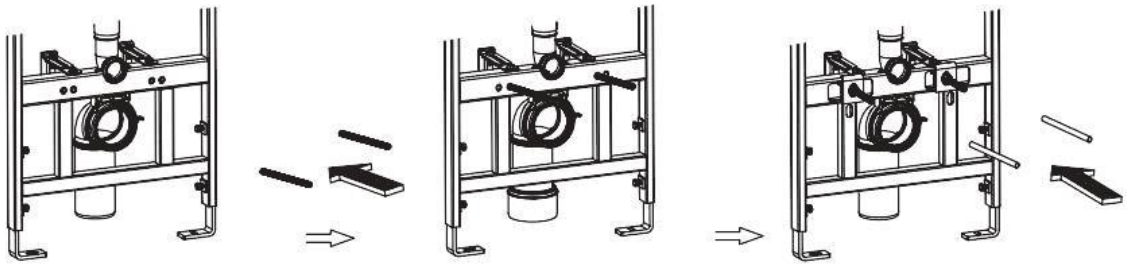

Water Connection

1. Make the connection between the water supply and the cistern tank, using a suitable sealing method as shown below.

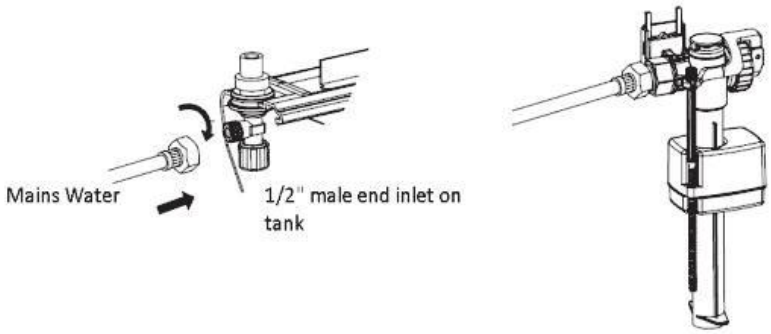

Please note: The cistern has its own built in stop valve

2. Once water is connected you're ready to build the partition wall. Use the guidance below and construct as required then tile as required.

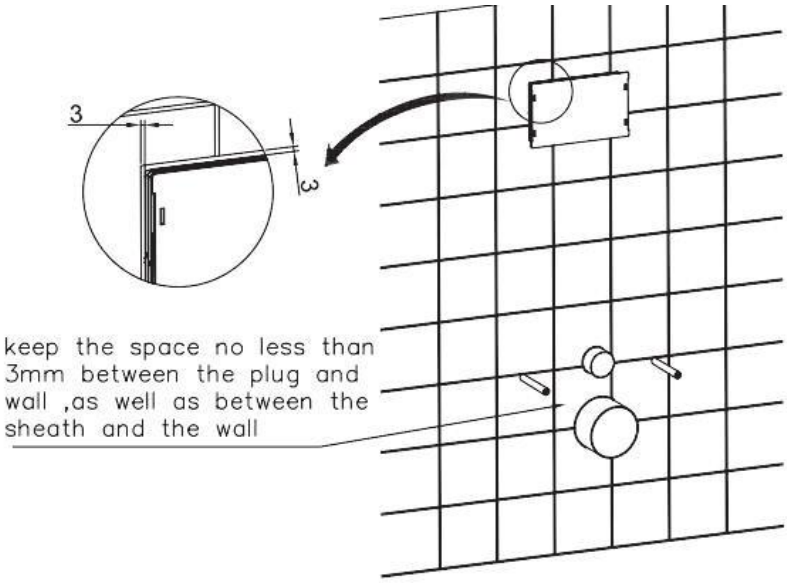

Installation once wall is constructed

1. Flatting the protective case frame against the wall surface

2.Screw in the levers for control plate

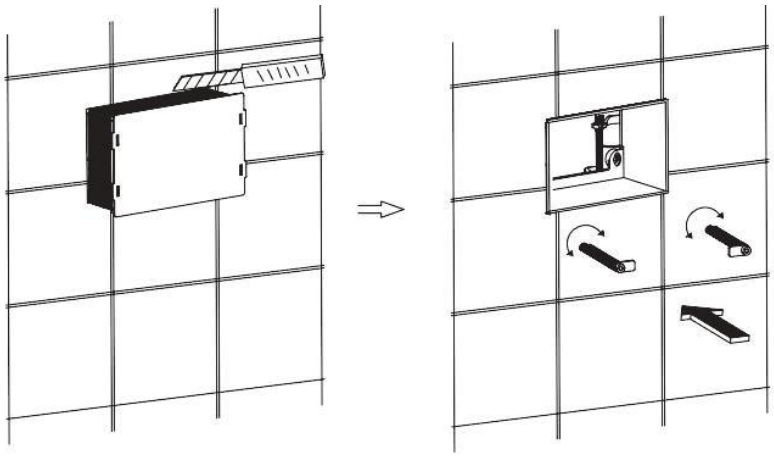

3. Fix the control plate base

4. Take out the air hose pipe

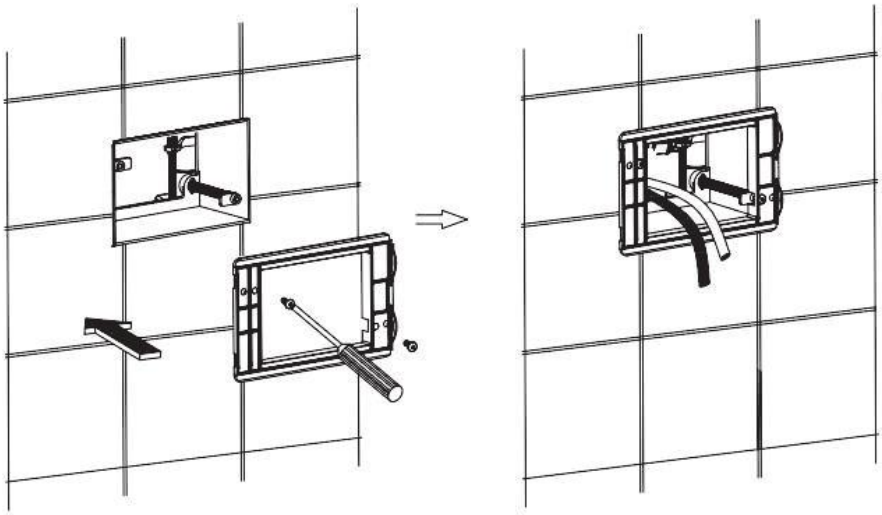

5. Connect the air hose pipe to the flush plate.

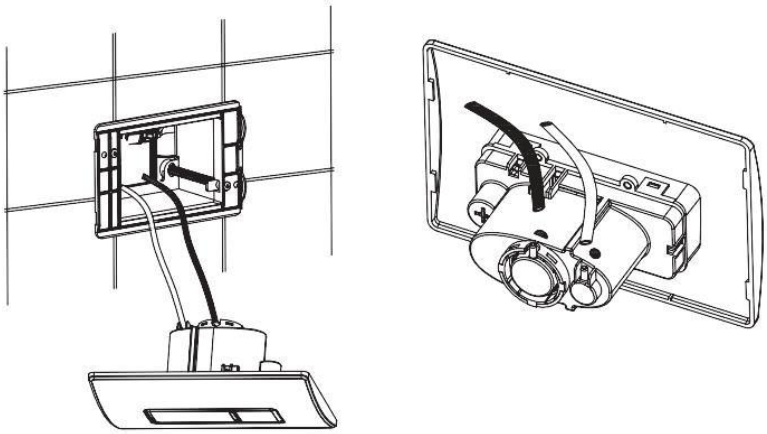

6. Attach the flush plate and click into position.

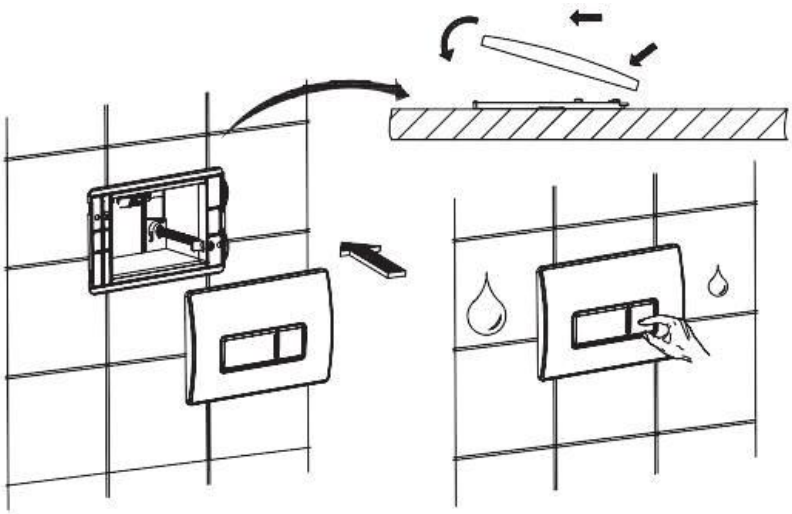

7. Remove the pan connector and flush pipe protective covers.

8. Push the straight pan connector, flush pipe and remaining parts into the holes in the frame.

9. Mark a line at the finished wall surface.

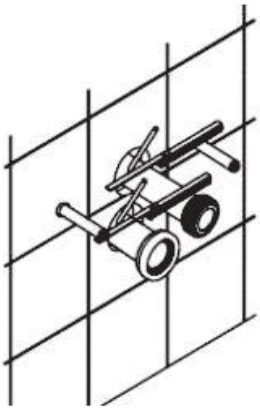

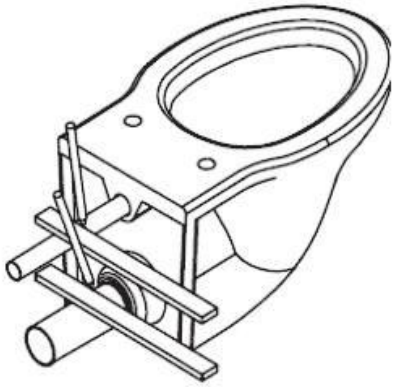

10.Remove from the frame and connect them to the flush hole and waste spigot on the rear of the toilet pan (Apply a small amount of washing up liquid to assist).

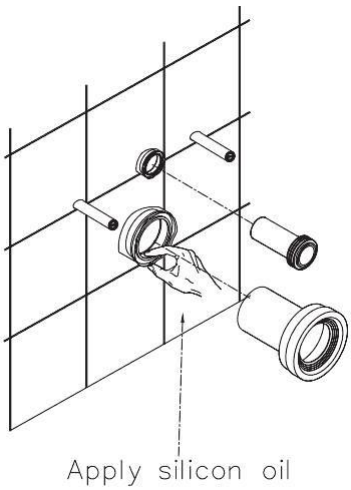

11.Once fully connected, mark the measurements and cut as shown below.

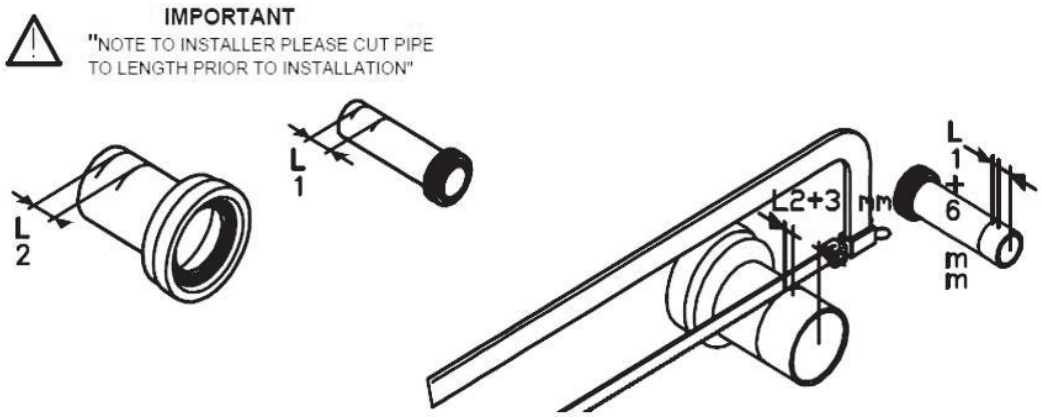

12. Prepare the flush pipe and pan connector ends removing any rough edges and create a small chamfer.

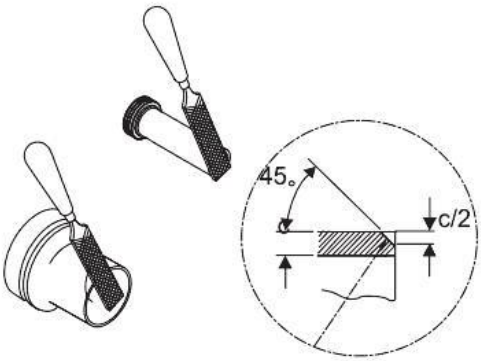

Connecting and Hanging the Toilet

1. Push the pan connector into the frame then push the flush pipe into the toilet

2. Remove the threaded bar sleeves.

3. Unscrew the threaded bars, so they extend by dimension A depth of the toilet wall + 25mm.

Please note: You will require two people for this section of the installation

4. Lift the toilet pan onto the threaded bars.

5. Finally, check that the toilet is level, connect the fixings in the order shown below and tighten until the toilet pan is secured.

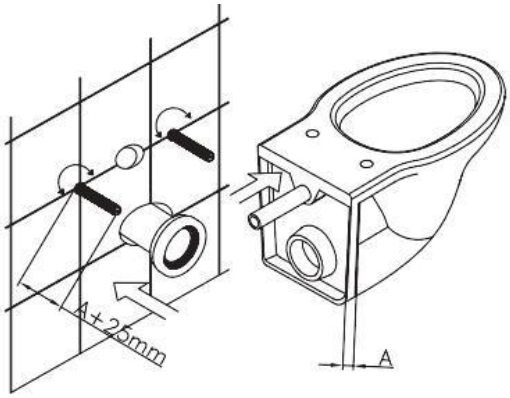

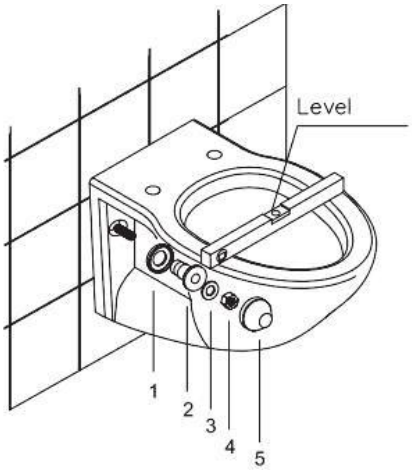

Please note: Once installation is completed a full commissioning of the product should be carried out to check the installation is safe and stable, check for leaks and check function

Troubleshooting

Cistern tank not filling at all or to the required level

1. Check the water supply has been turned back on and is reaching the cistern.
2. Adjust the fill level on the cistern as required.
3. The filter on the inlet valve could be blocked.
4. If none of these resolve the issue replace the inlet valve.

Flush volume into the pan, not sufficient

1. Adjust the flush volume level on the syphon.
2. Check that the syphon is opening correctly.
3. Check that the tubes are connected to the correct inlet on the flush plate.
4. If none of these resolve the issue replace the syphon.

Water running into the pan continually after flushing

1. Establish if the water level in the cistern is reaching the overflow on the syphon, if it does, adjust the inlet valve.
2. If this continues, replace the inlet valve.
3. If the water level does not reach the overflow on the syphon, remove the top section of the syphon and check the washer for damage.
4. If damaged replace.

Maintenance

The maintenance measures below require you to gain access to the internals of the cistern tank, and for the water supply to be turned off.

- Once you have gained access, turn the adjustment screw in the required direction to adjust the tank fill volume.

- If you need to replace the inlet valve, disconnect the water supply pipe and remove the retaining nut, which holds the inlet valve to the tank and pull the inlet valve from the tank.

- To clear the filter, unscrew the filter section from the inlet valve as shown and run under warm water using a brush to clean away any blockage.

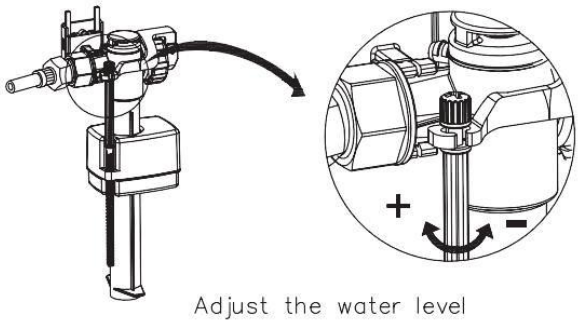

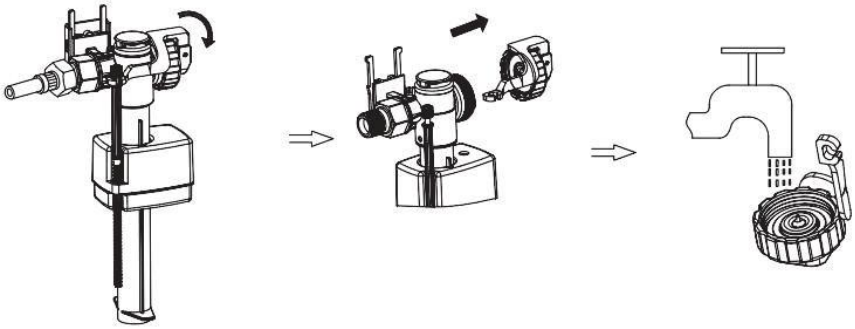

- It is recommended to remove the pneumatic tubes from the syphon to carry out maintenance.
- To do this, pull each tube from the inlet on the top of the syphon, do not allow these to drop back into the tank.
- To remove the syphon, you will only need to remove the top section, which requires you to twist and lift.
- To adjust the flush volume, move the slider as shown below.
- To remove the washer, turn the syphon upside down and the washer from the housing.

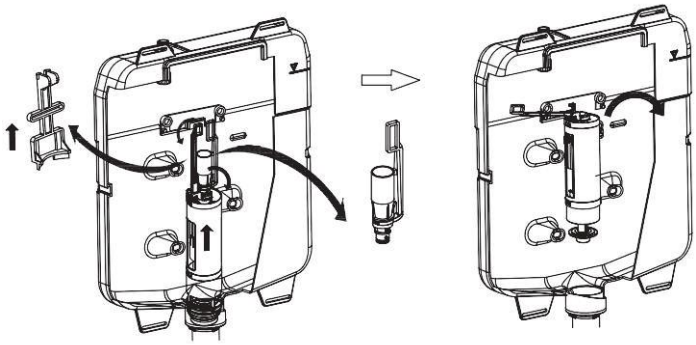

Installation & remove the flush valve

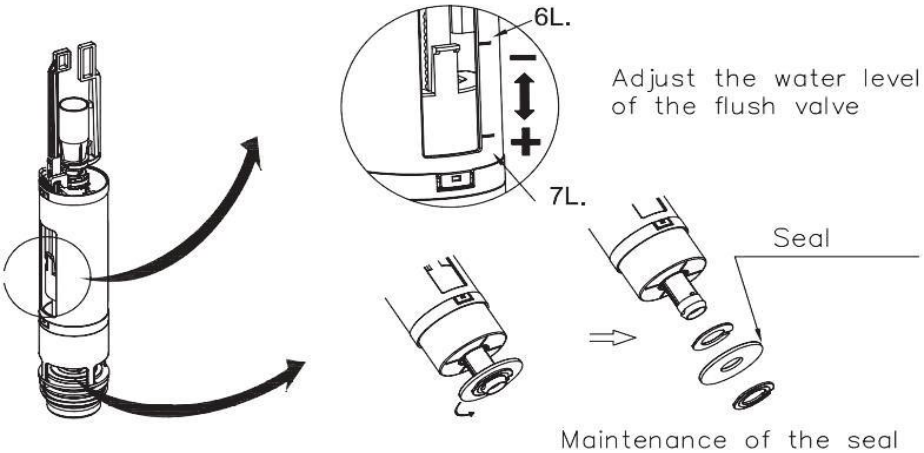

For more information
- visit betterbathrooms.com
- email customerservices@buyitdirect.co.uk
- call 03303903062
- write to Trident Business Park, Leeds Road, HD2 1UA

better bathrooms

Part of the BuyItDirect Group

DECLARATION OF PERFORMANCE Ref: DOP BB-34C

1. Unique identification code of the product-type:

BeBa_25877, BeBa_25878, BeBa_25879, BeBa_27485, BeBa_26168, BeBa_26169, MANCONCIS

2. Type, batch or serial number or any other element allowing identification of the construction product as required under the Regulations listed in Point 9

WC flushing cistern(s)

3. Intended use or uses of the construction product, in accordance with the applicable harmonized/designated technical specification, as foreseen by the manufacturer:

Personal Hygiene

4. Name, registered trade name or registered trade mark and contact address of the manufacturer as required in the Regulations listed in Point 9

Buy It Direct, Trident Business Park, Leeds Road, HD2 1UA

Buy It Direct - The Black Church, St Mary's Place, Dublin 7

5. Where applicable, name and contact address of the authorised representative whose mandate covers the tasks specified in the Regulations listed in Point 9

Not Applicable

6. System or systems of assessment and verification of constancy of performance of the construction product as set out in the Regulations listed in Point 9

System 4

7. In case of the declaration of performance concerning a construction product covered by a harmonized/designated standard.

BS EN14055:2010+A1:2015 – CL1

8. Declared performance:

Construction Product: WC flushing cistern of type1 Intended use: Personal hygiene			
Essential Characteristics	Clauses in this European Standard related to Essential Characteristics	Classes and/or threshold levels	Notes
Watertightness/leaktightness	5.2.8	—	Confirmed
Outlet valve reliability	5.2.9	—	Confirmed
Noise level	8	—	Confirmed
Flushing volume	5.2.1	—	Confirmed
Durability	5.2.11	—	Confirmed

9. We hereby declare that the products named above have been designed, are produced and have been tested to comply with relevant sections of the above referenced standard and

- Regulation (EU) No, 305/2011
- Construction Products (Amendment etc.) (EU Exit) Regulations 2020 – SI 2020/1359

Signed for and on behalf of the manufacturer:

Craig Watson (QA Manager) – 24/8/23

236J781-E71-01B